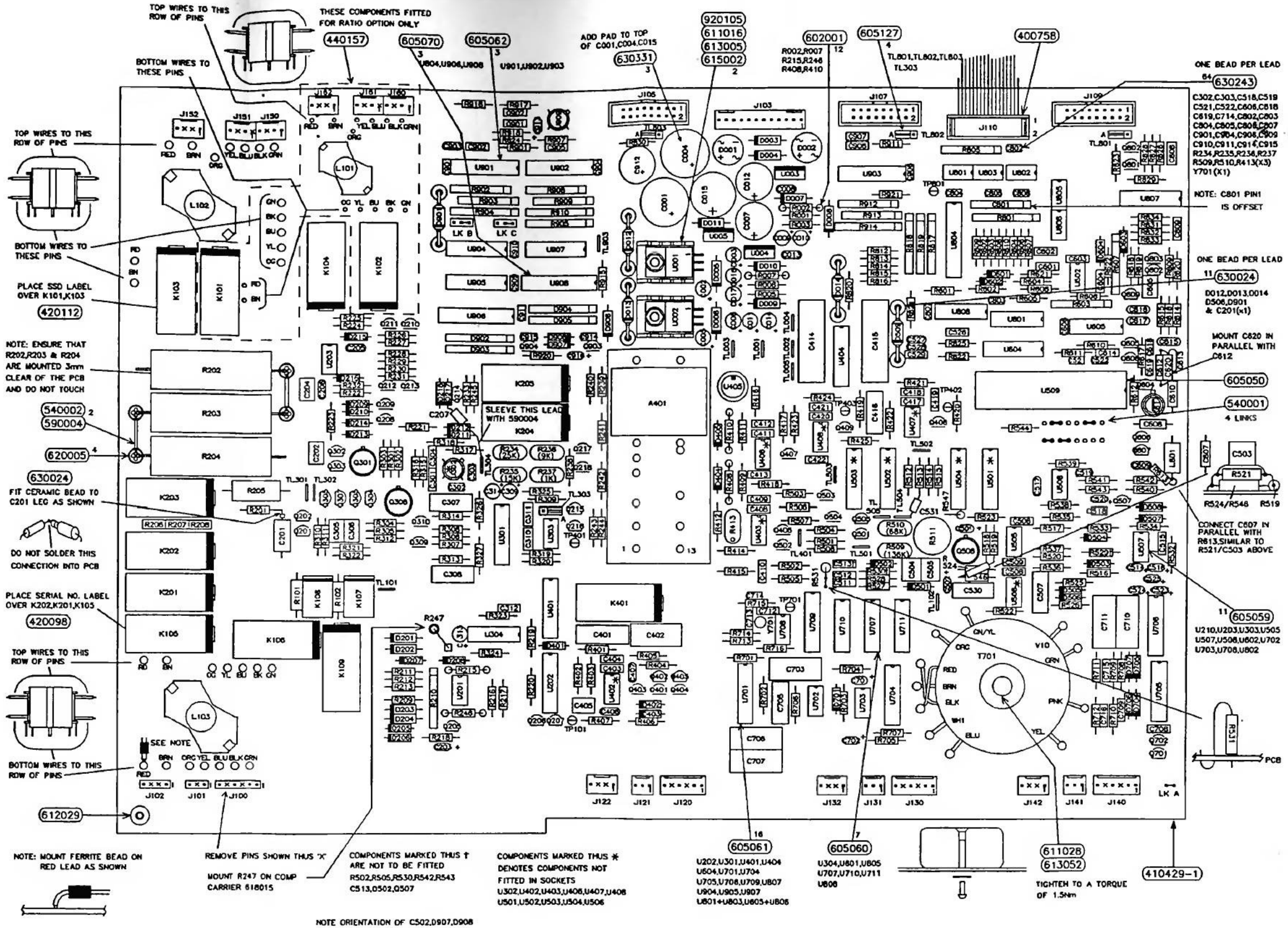

1271

WAVETEK datron

© Wavetek Ltd. 1992

DC ASSEMBLY

Drawing No. DA400866-1.6 Sheet 1

N.B. expanded versions are on Sheets 2 and 3 *(page 11.4-1)*

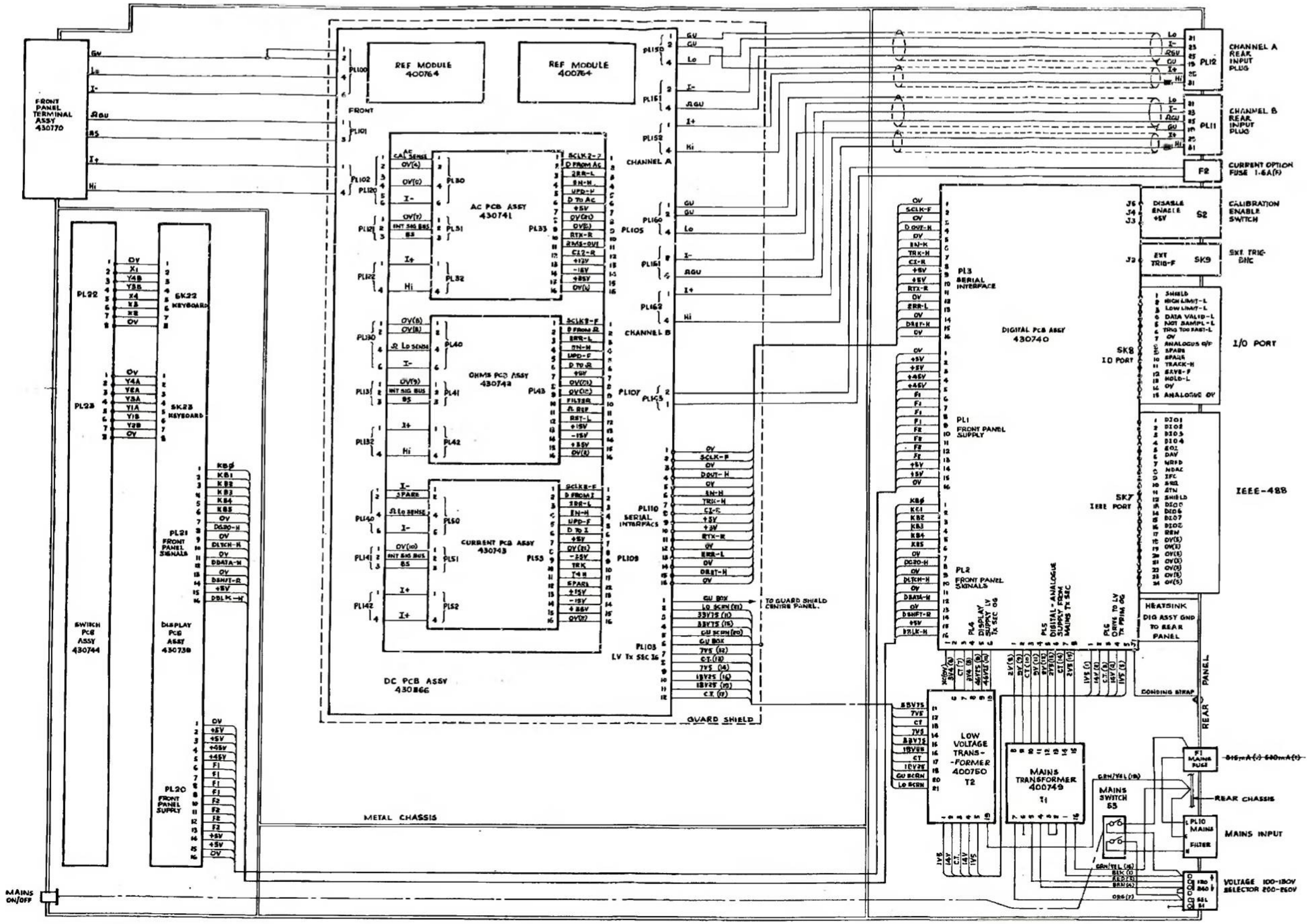

1271

datron WAVETEK

INTERCONNECTION DIAGRAM

Drawing No. DC400891 Sheet 1

© Datron Instruments 1989

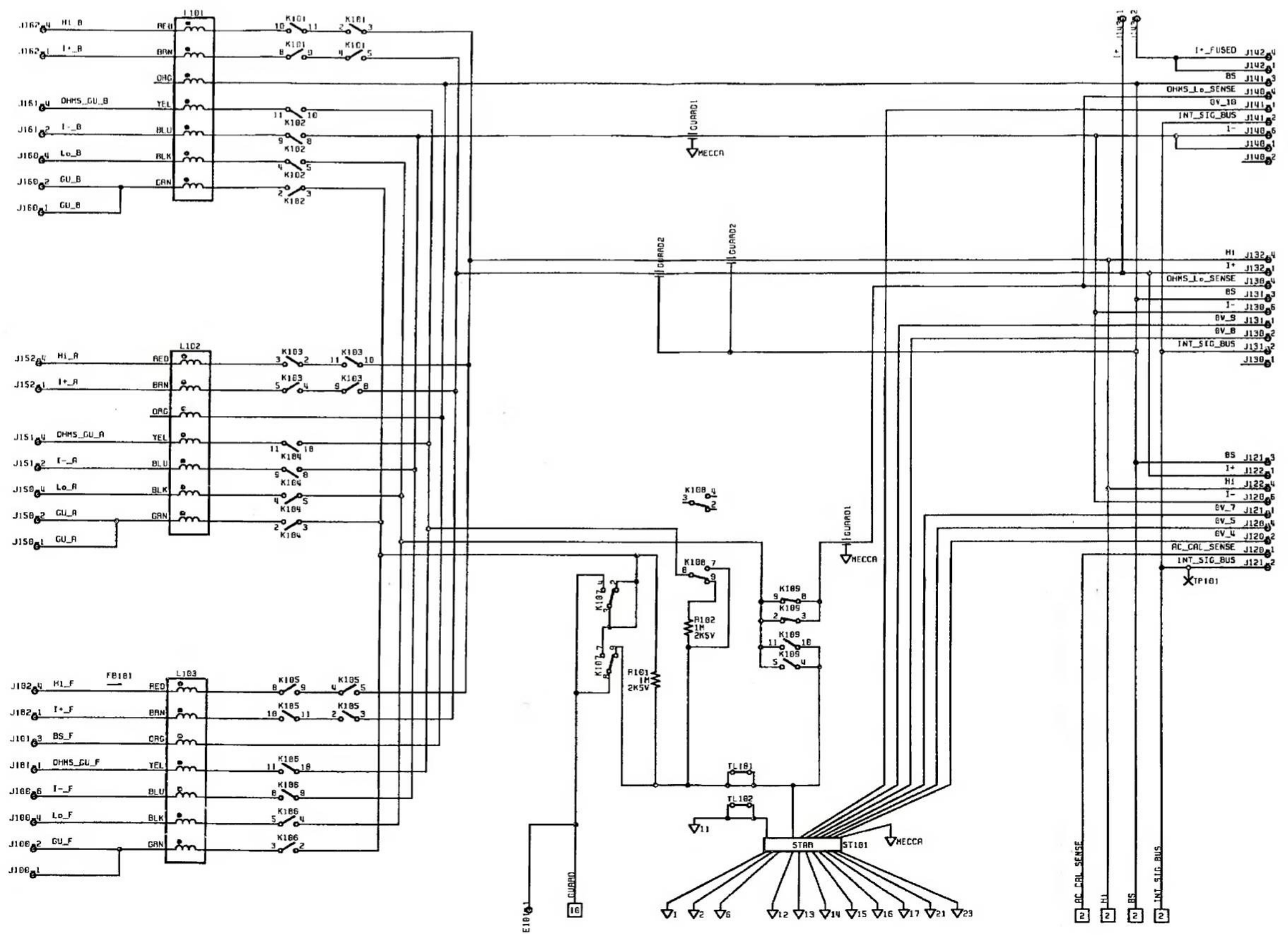

1271

D.C. ASSEMBLY

Input Signal Switching

Drawing No. DC400866 **Sheet 1 of 10**

datron WAVETEK

© Datron Instruments 1989

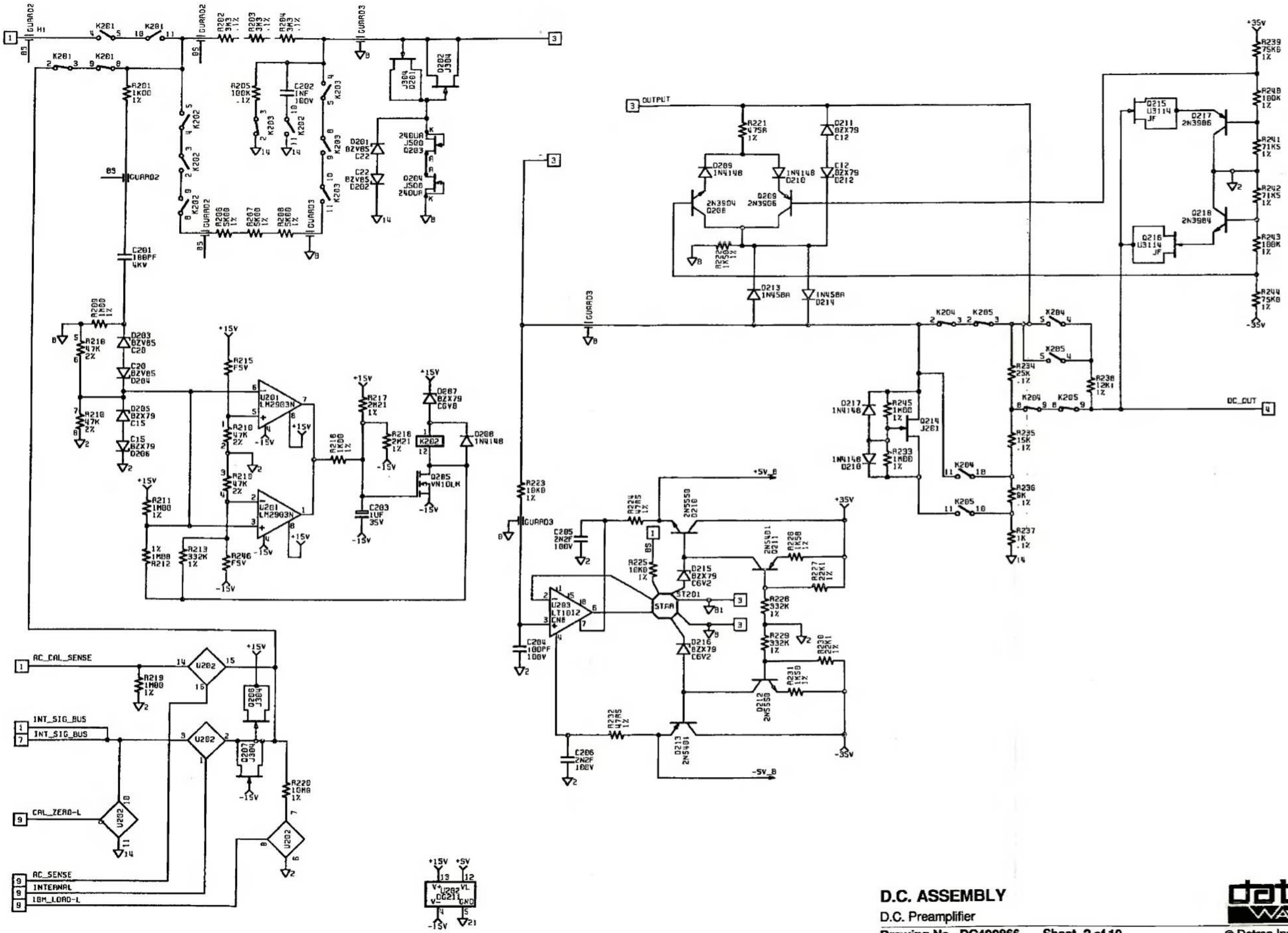

D.C. ASSEMBLY

D.C. Preamplifier

Drawing No. DC400866 **Sheet 2 of 10**

1271

datron WAVETEK

© Datron Instruments 1989

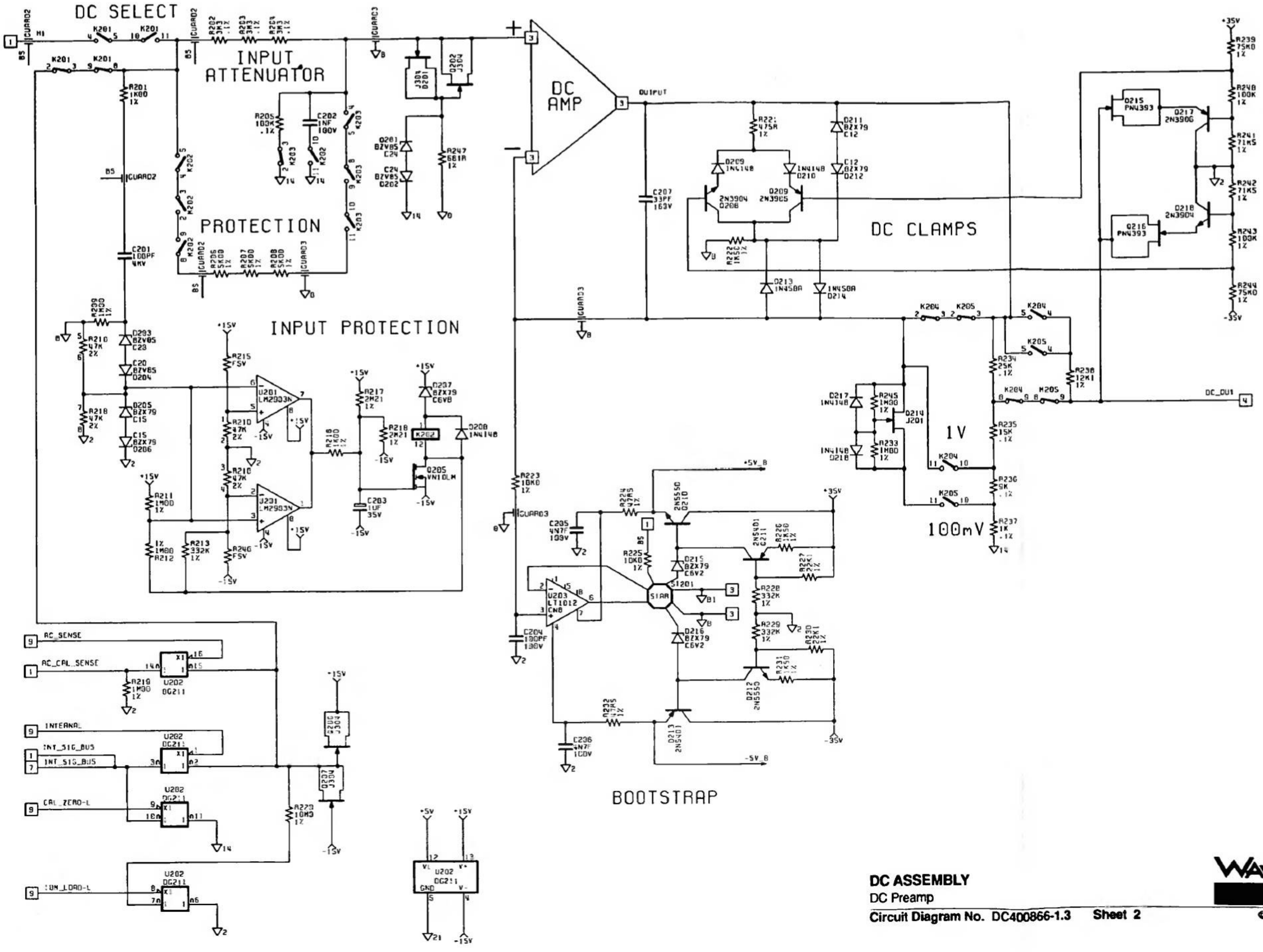

DC ASSEMBLY

DC Preamp

Circuit Diagram No. DC400866-1.3 **Sheet 2**

1271

WAVETEK datron

© Wavetek Ltd. 1992

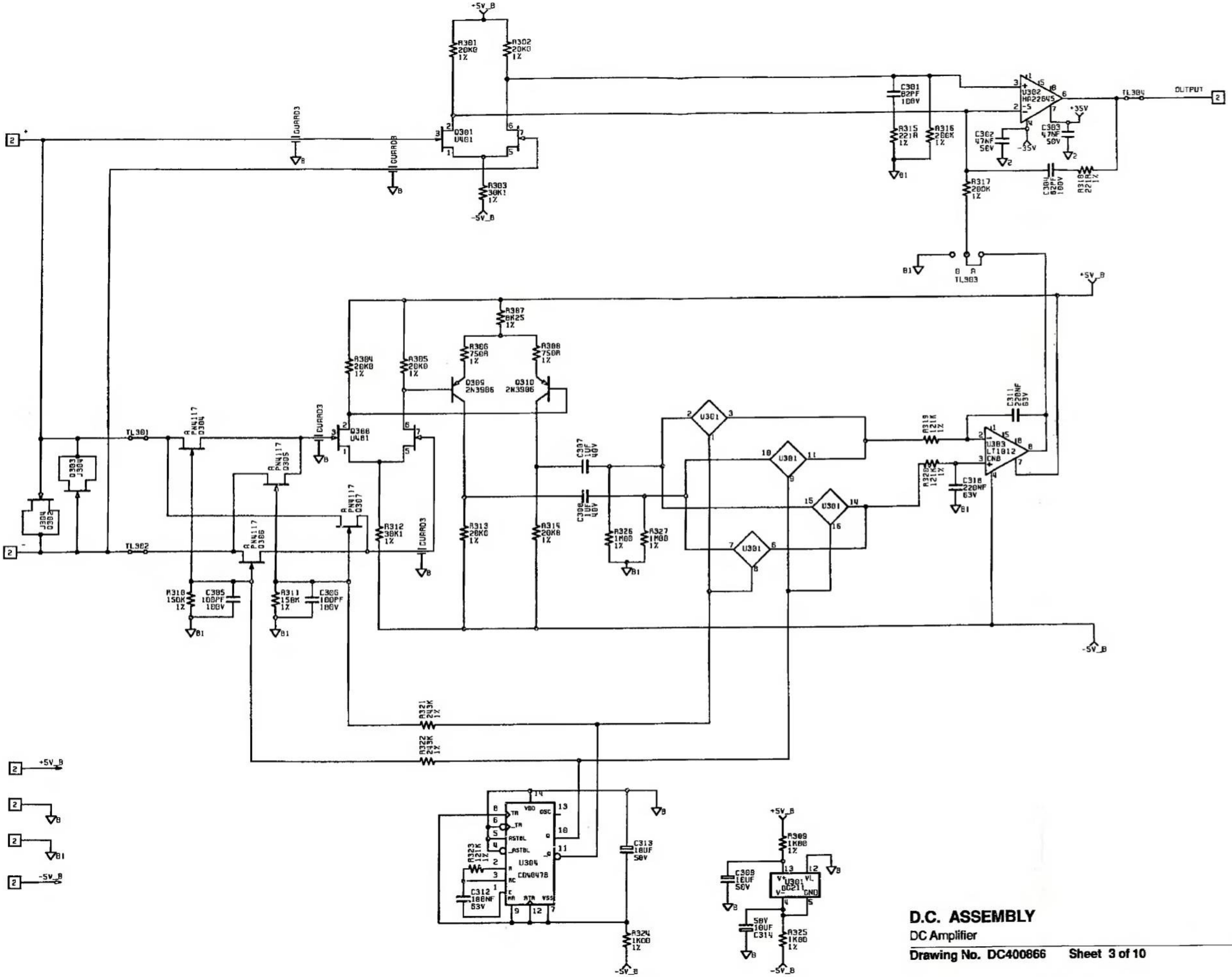

D.C. ASSEMBLY

DC Amplifier

Drawing No. DC400866 **Sheet 3 of 10**

1271

datron WAVETEK

© Datron Instruments 1989

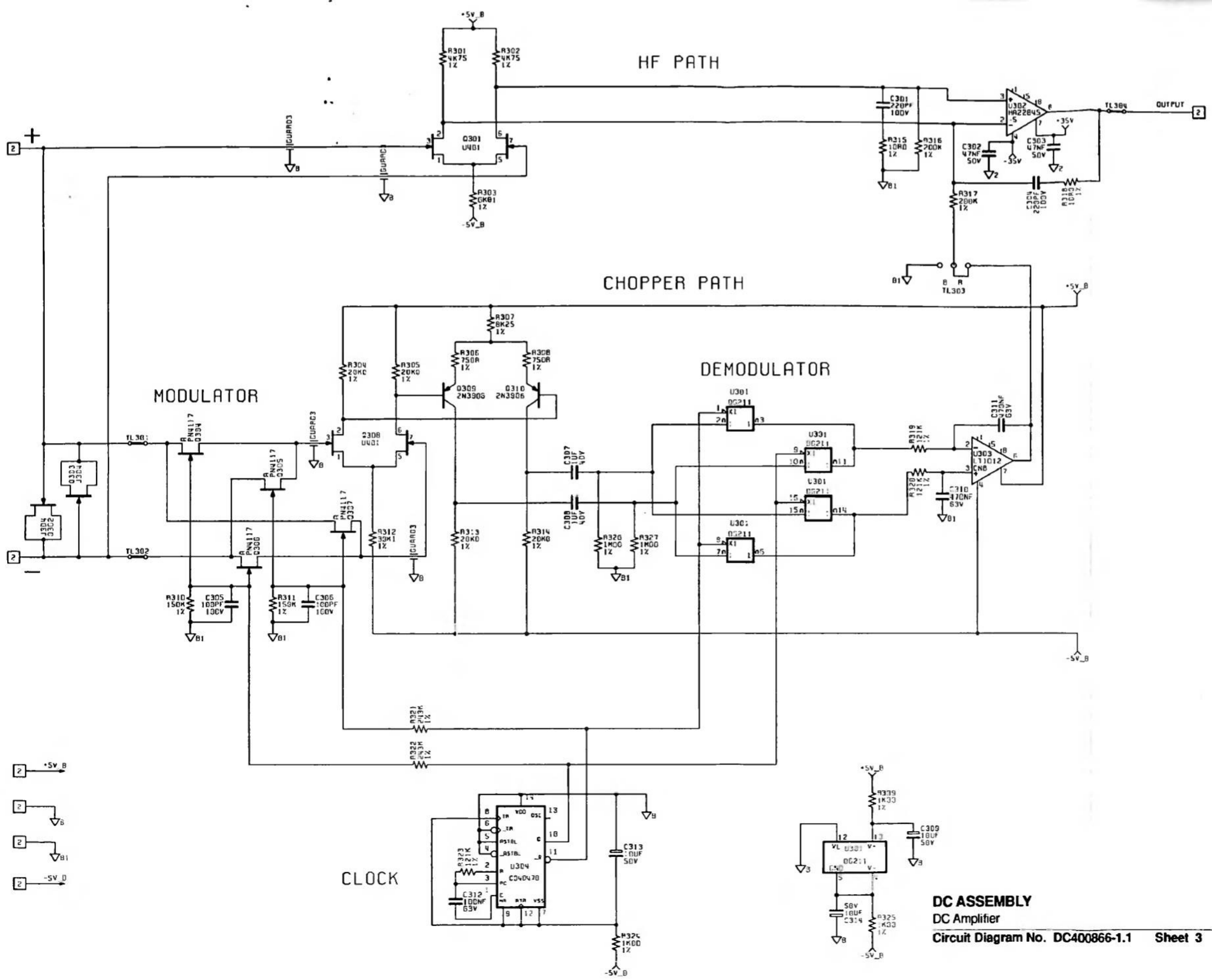

DC ASSEMBLY

DC Amplifier

Circuit Diagram No. DC400866-1.1 **Sheet 3**

1271

WAVETEK datron

© Wavetek Ltd. 1992

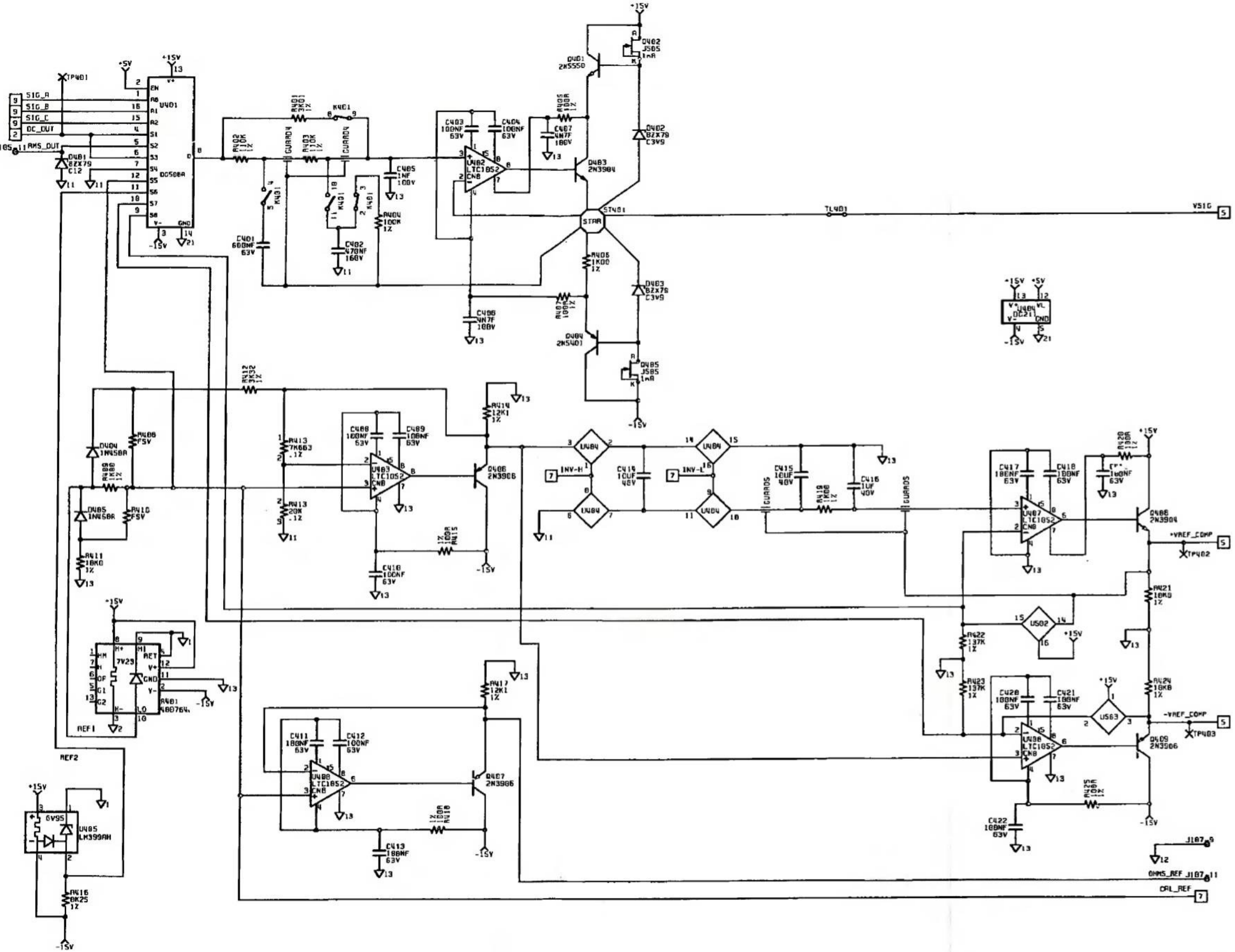

1271

D.C. ASSEMBLY

References and Signal Switching

Drawing No. DC400866 Sheet 4 of 10

datron WAVETEK

© Datron Instruments 1989

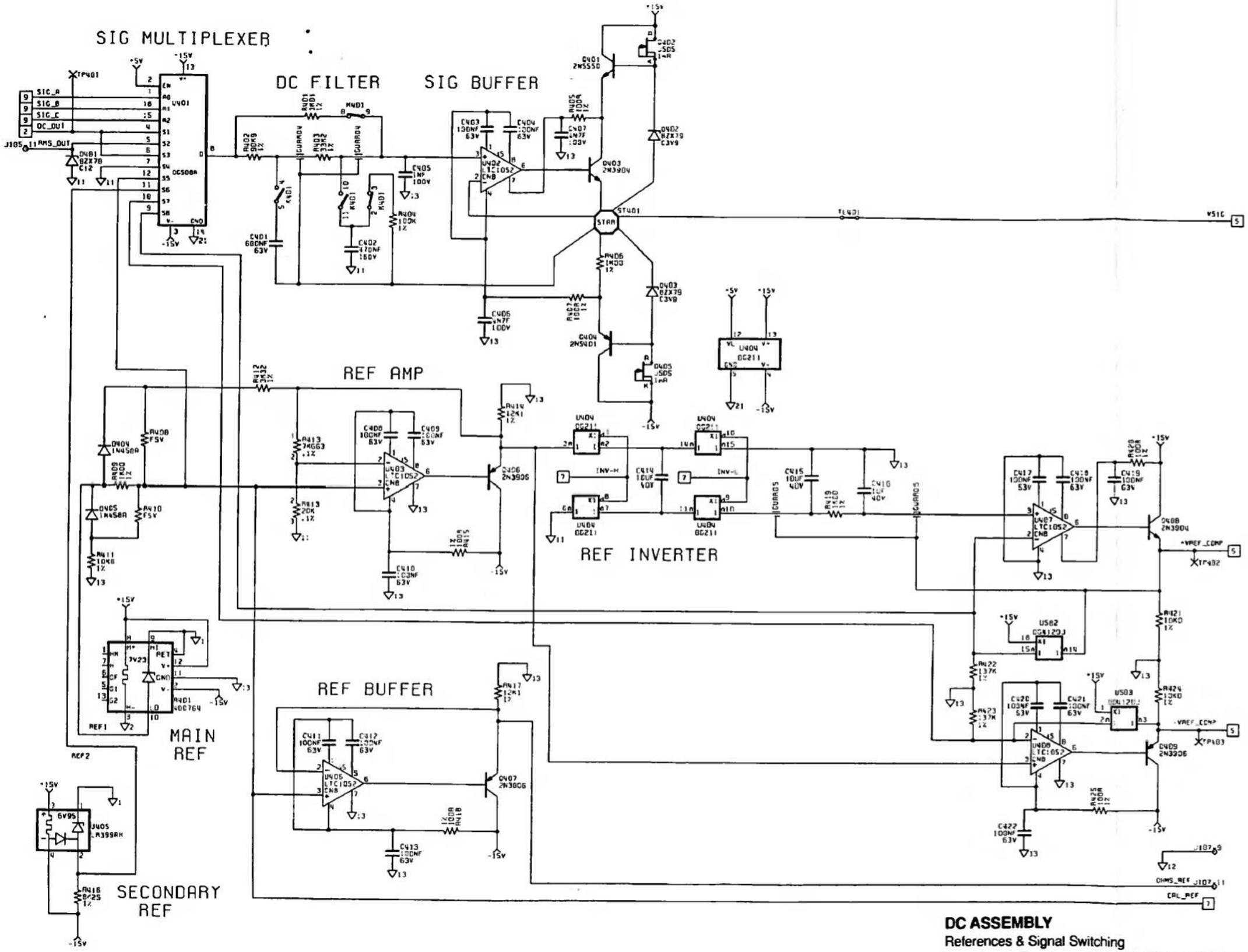

DC ASSEMBLY

References & Signal Switching

Circuit Diagram No. DC400866-1.1 Sheet 4

1271

WAVETEK datron

© Wavetek Ltd. 1992

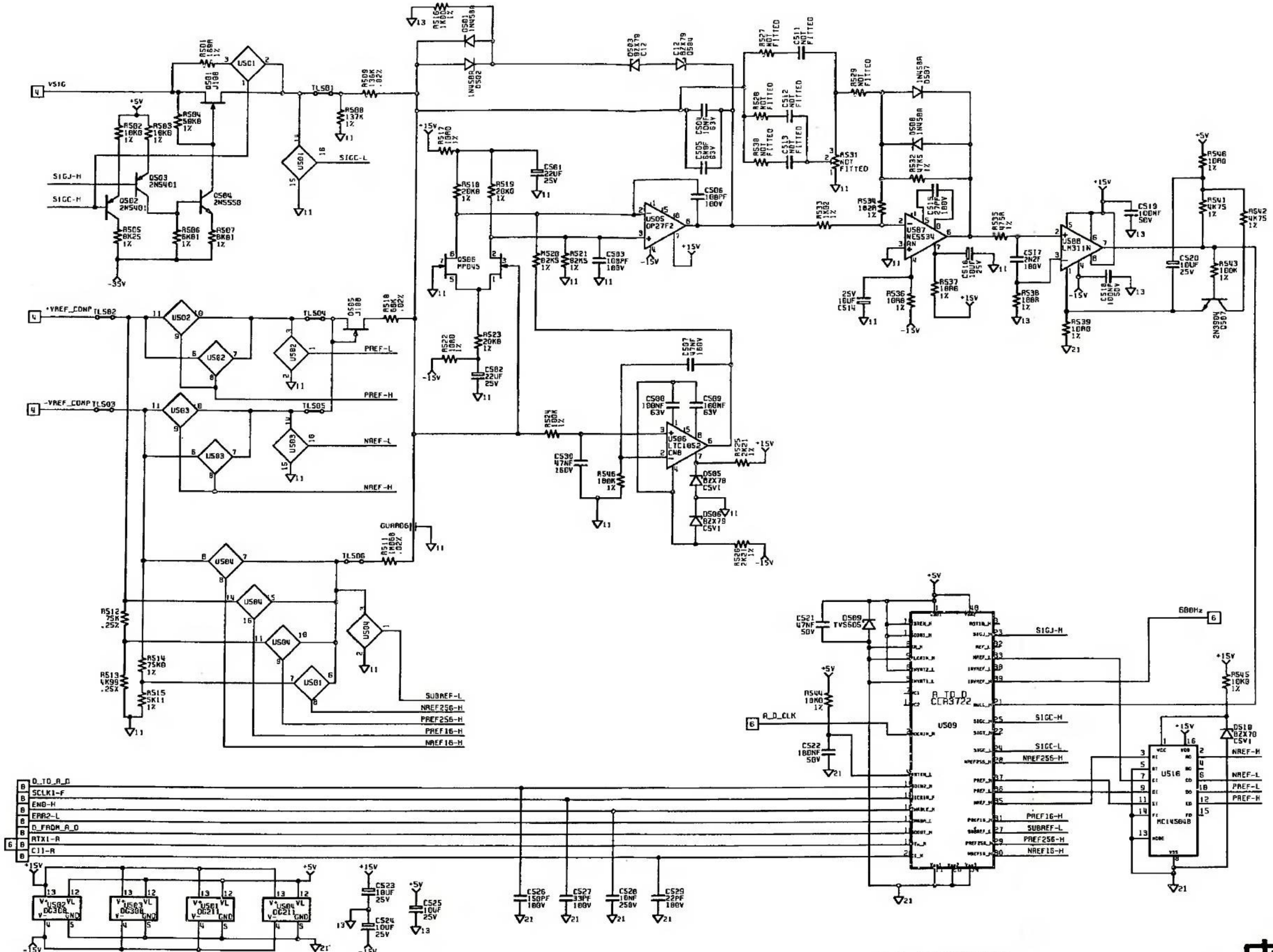

1271

D.C. ASSEMBLY

Analog to Digital Converter

Drawing No. DC400866 Sheet 5 of 10

© Datron Instruments 1989

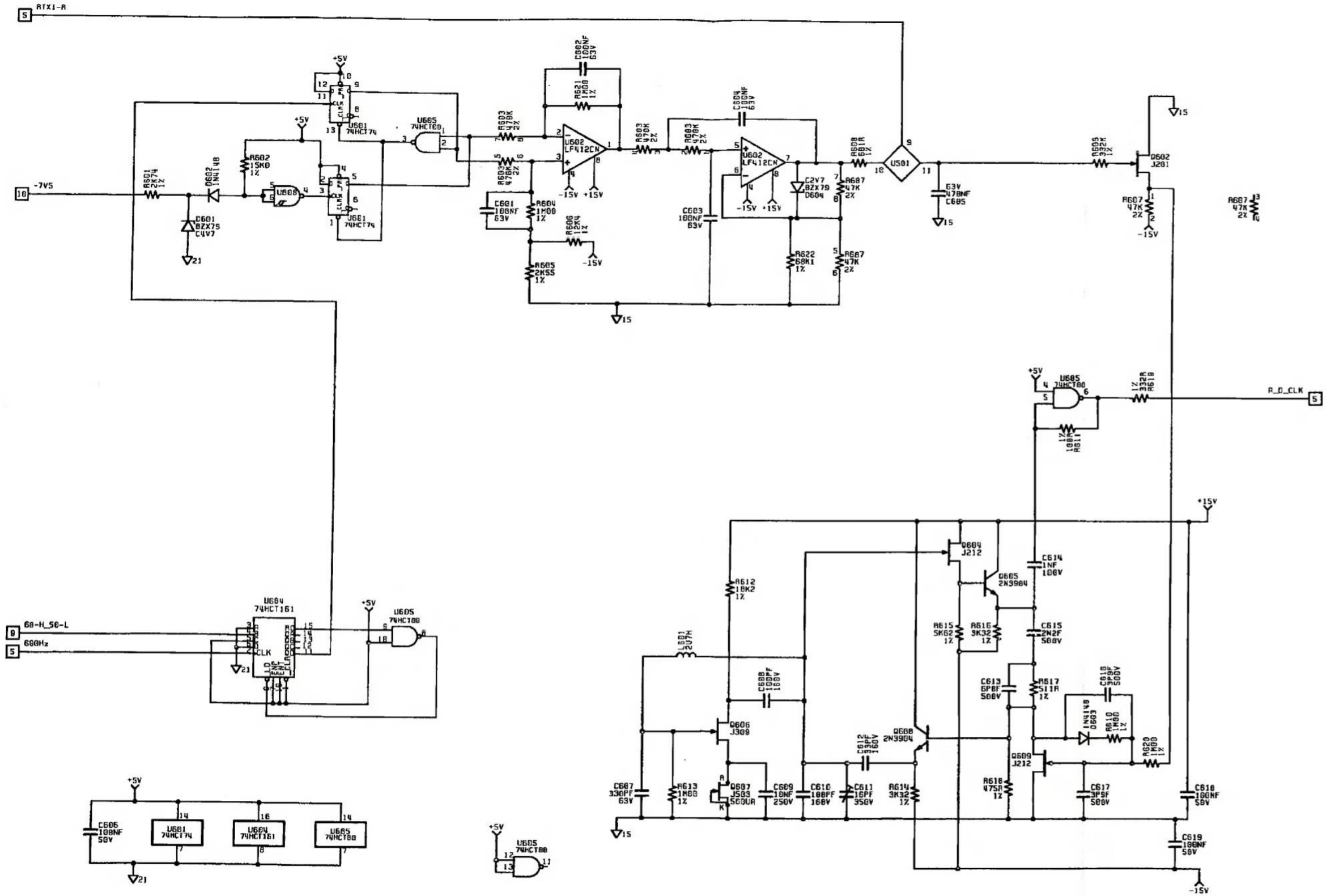

D.C. ASSEMBLY

Line Locking and A-D Control

Drawing No. DC400866 **Sheet 6 of 10**

1271

datron WAVETEK

© Datron Instruments 1989

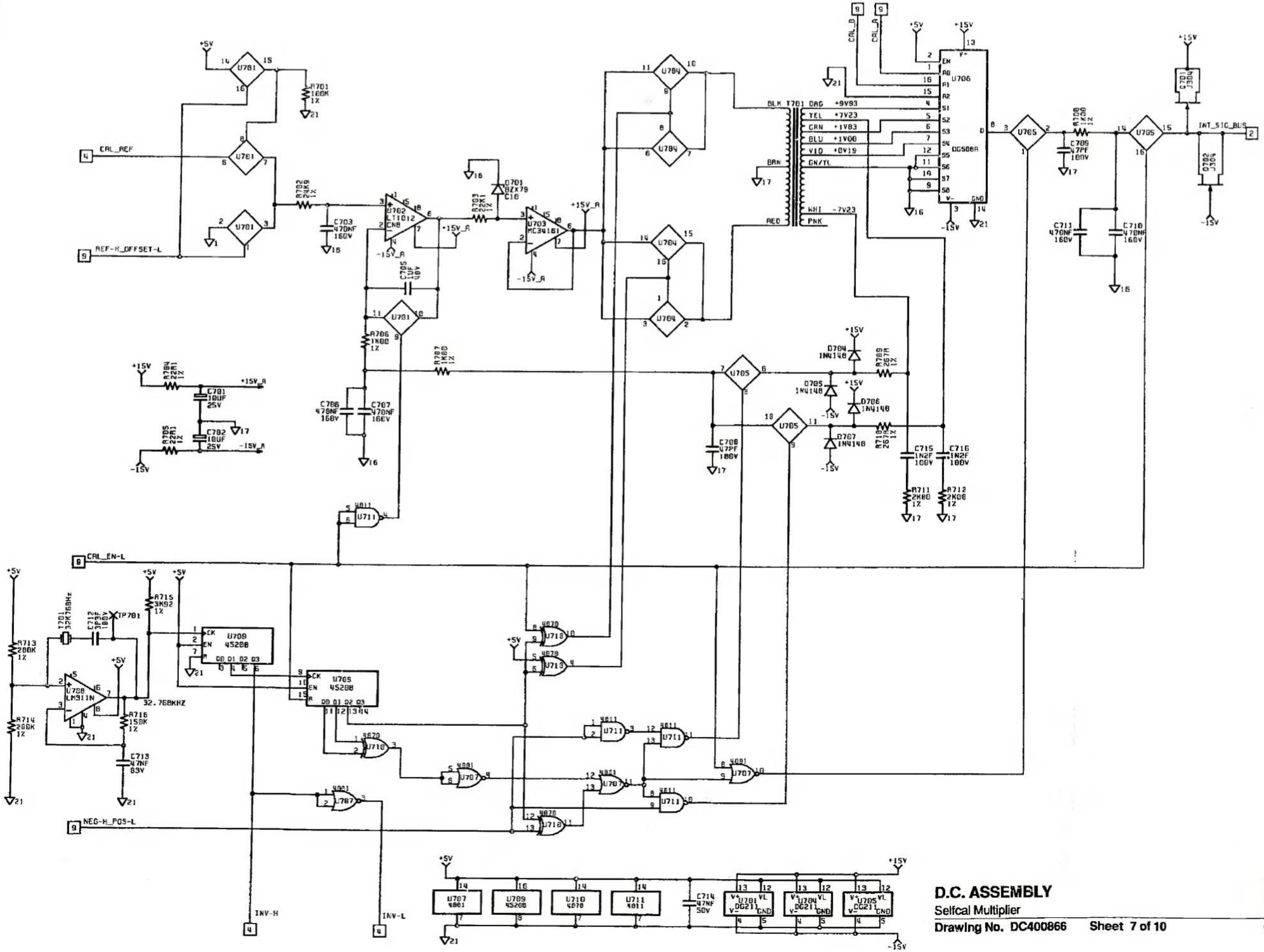

D.C. ASSEMBLY

Selfcal Multiplier

Drawing No. DC400866 Sheet 7 of 10

1271

datron WAVETEK

© Datron Instruments 1989

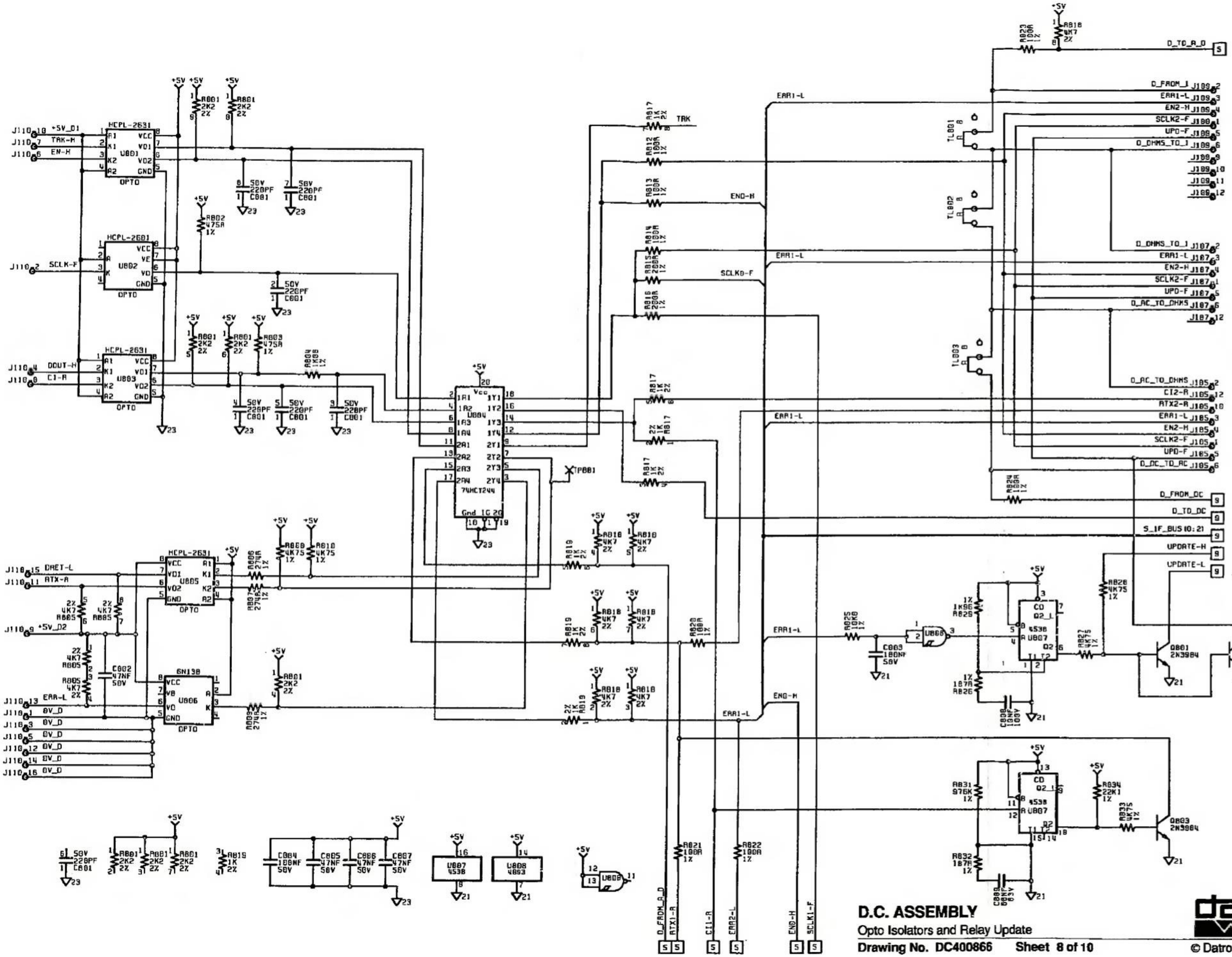

D.C. ASSEMBLY

Opto Isolators and Relay Update

Drawing No. DC400866 Sheet 8 of 10

1271

datron WAVETEK

© Datron Instruments 1989

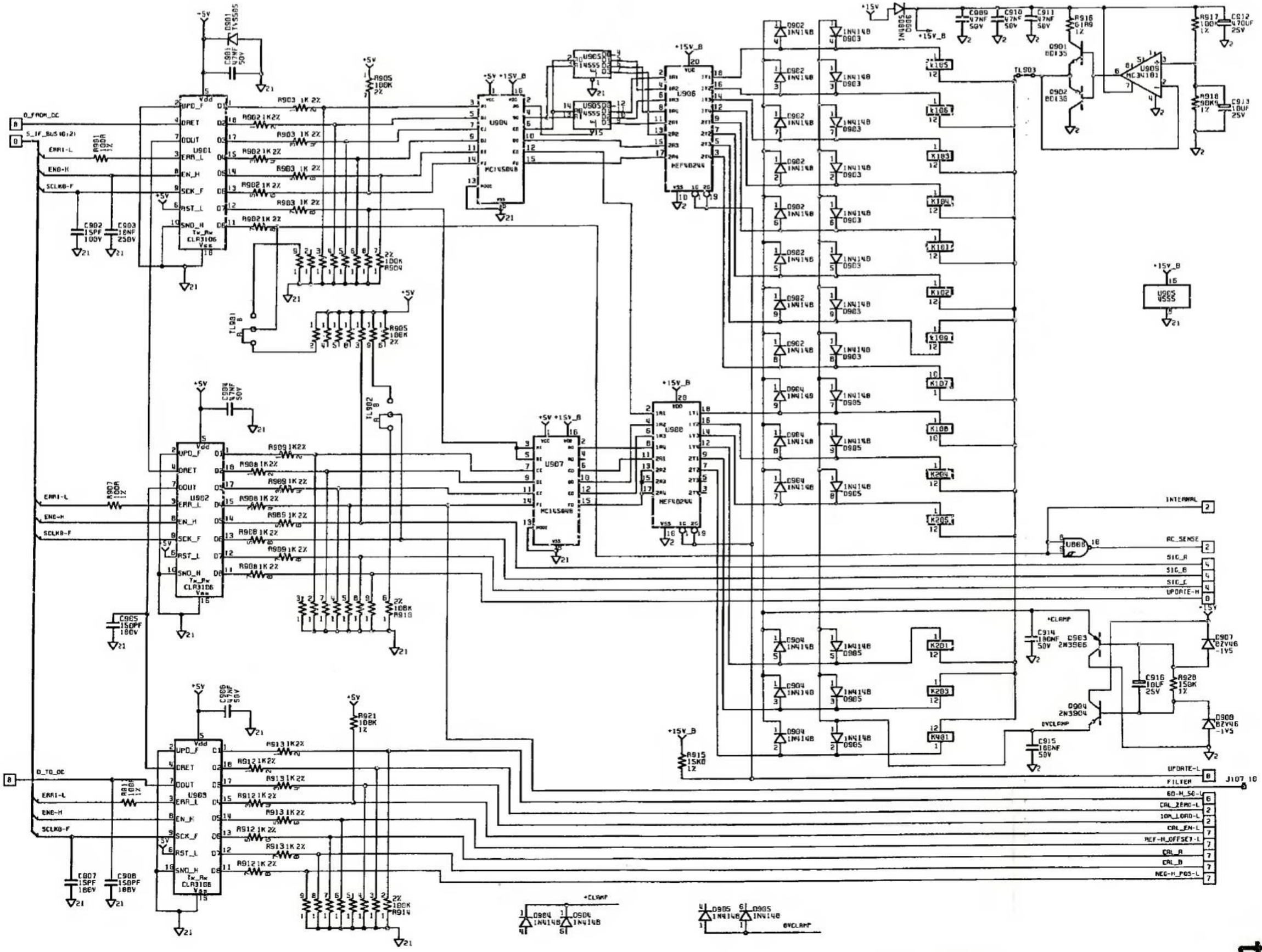

1271

D.C. ASSEMBLY

Control and Relay Drive

Drawing No. DC400866 **Sheet 9 of 10**

datron WAVETEK

© Datron Instruments 1989

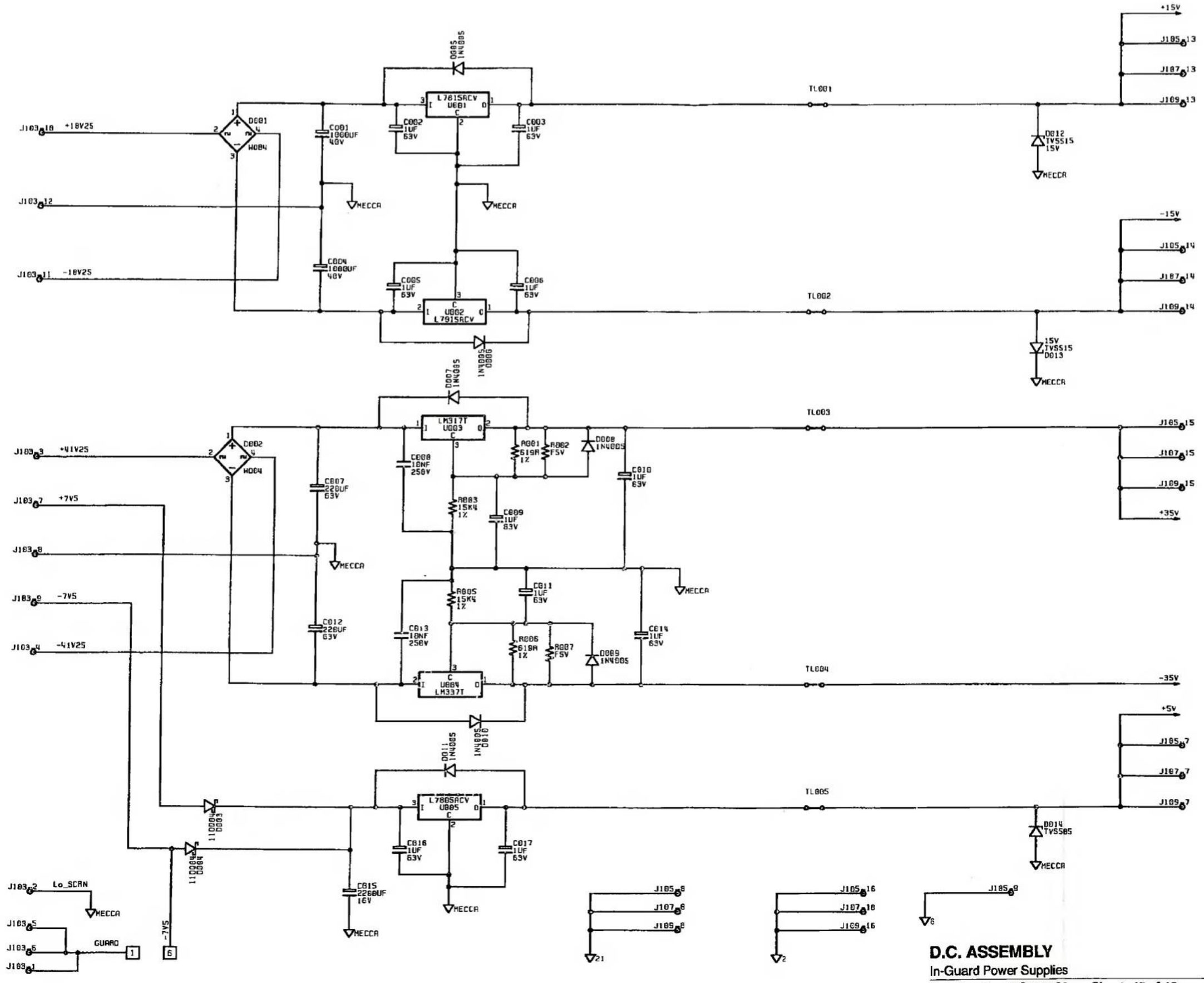

1271

D.C. ASSEMBLY

In-Guard Power Supplies

Drawing No. DC400866 **Sheet 10 of 10**

© Datron Instruments 1989

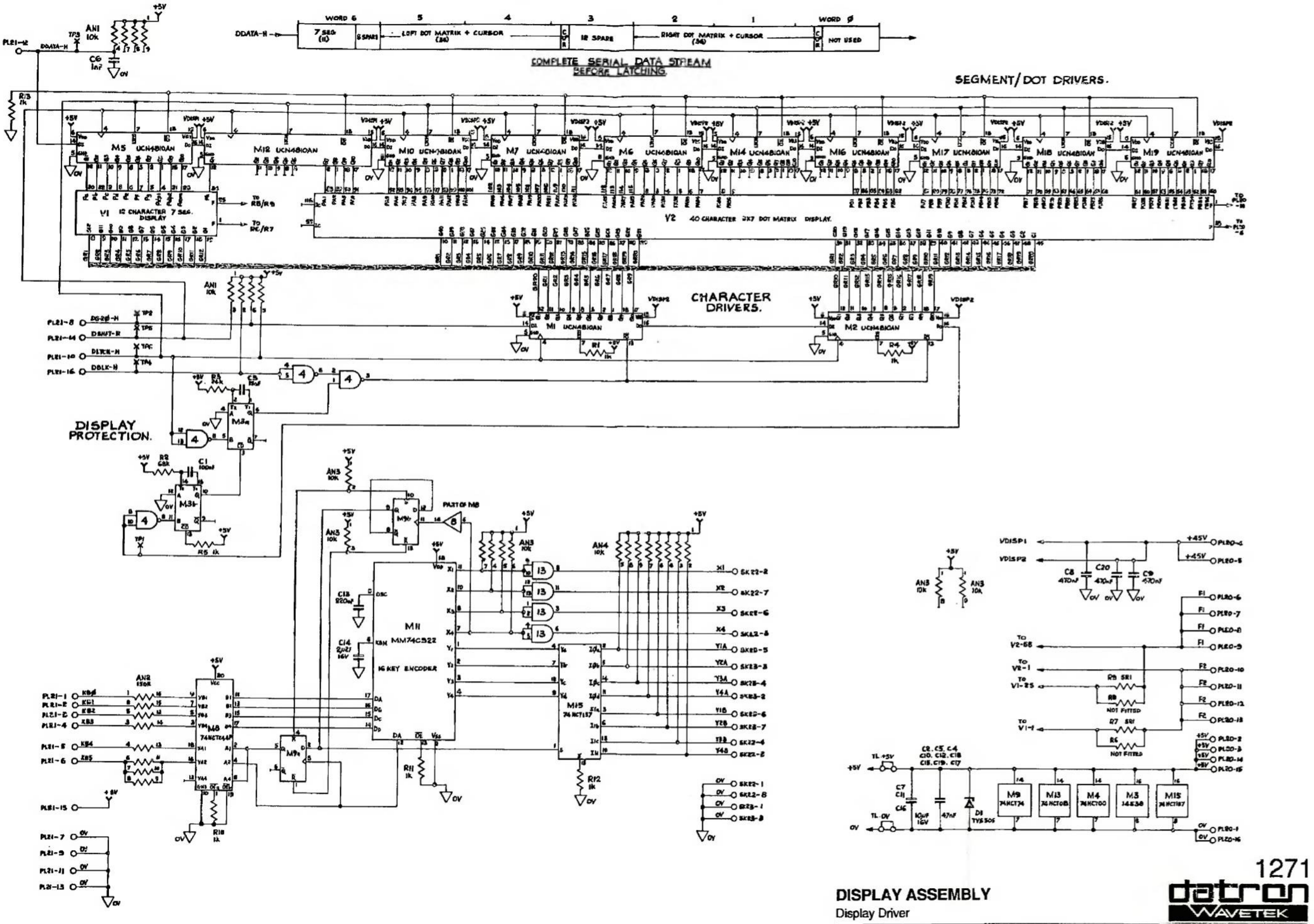

DISPLAY ASSEMBLY

Display Driver

Drawing No. 430739 **Sheet 1 of 1**

1271

datron WAVETEK

© Datron Instruments 1989

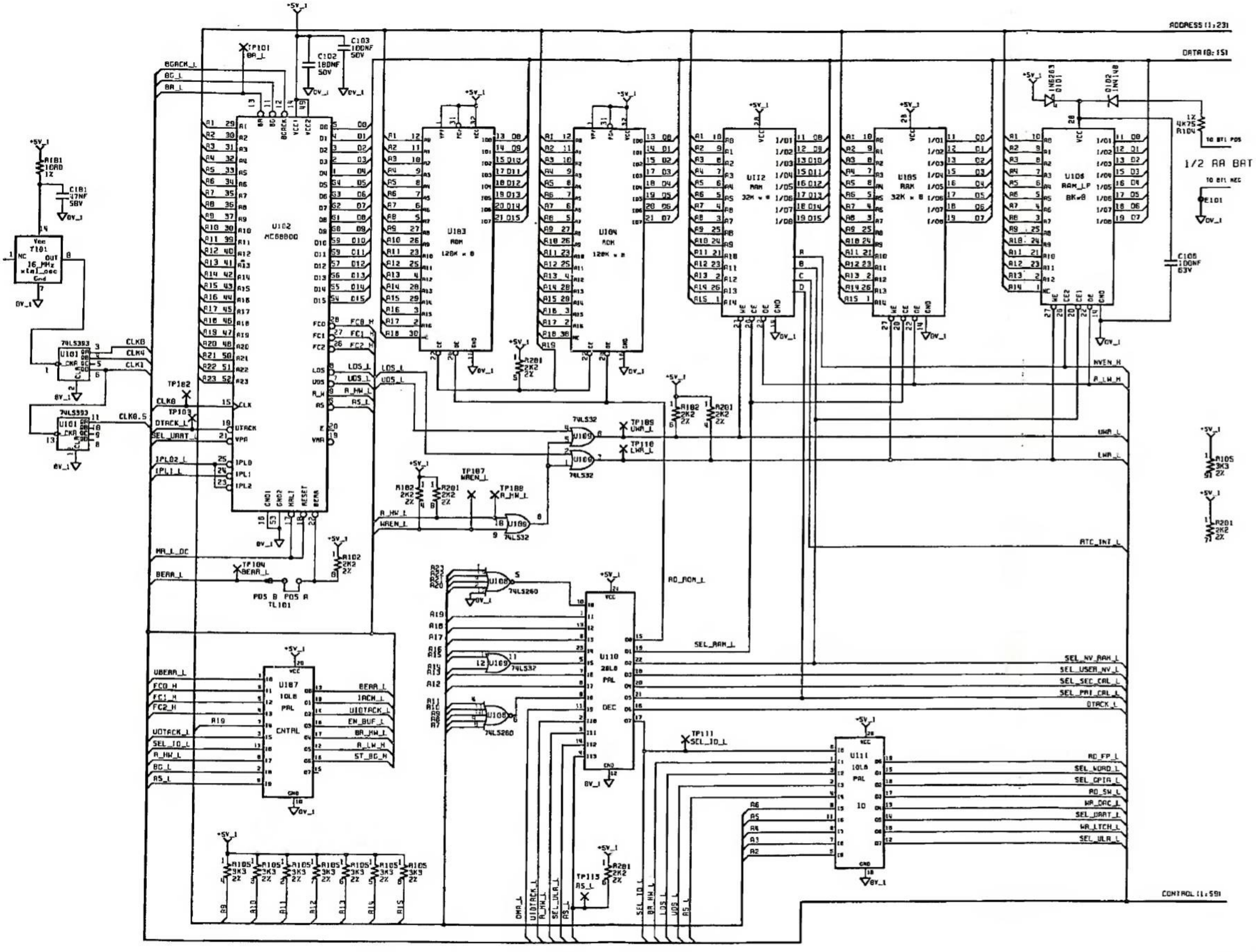

DIGITAL ASSEMBLY

Processor, Address Decoding and Memory

Drawing No. DC400901 **Sheet 1 of 5**

1271

datron WAVETEK

© Datron Instruments 1989

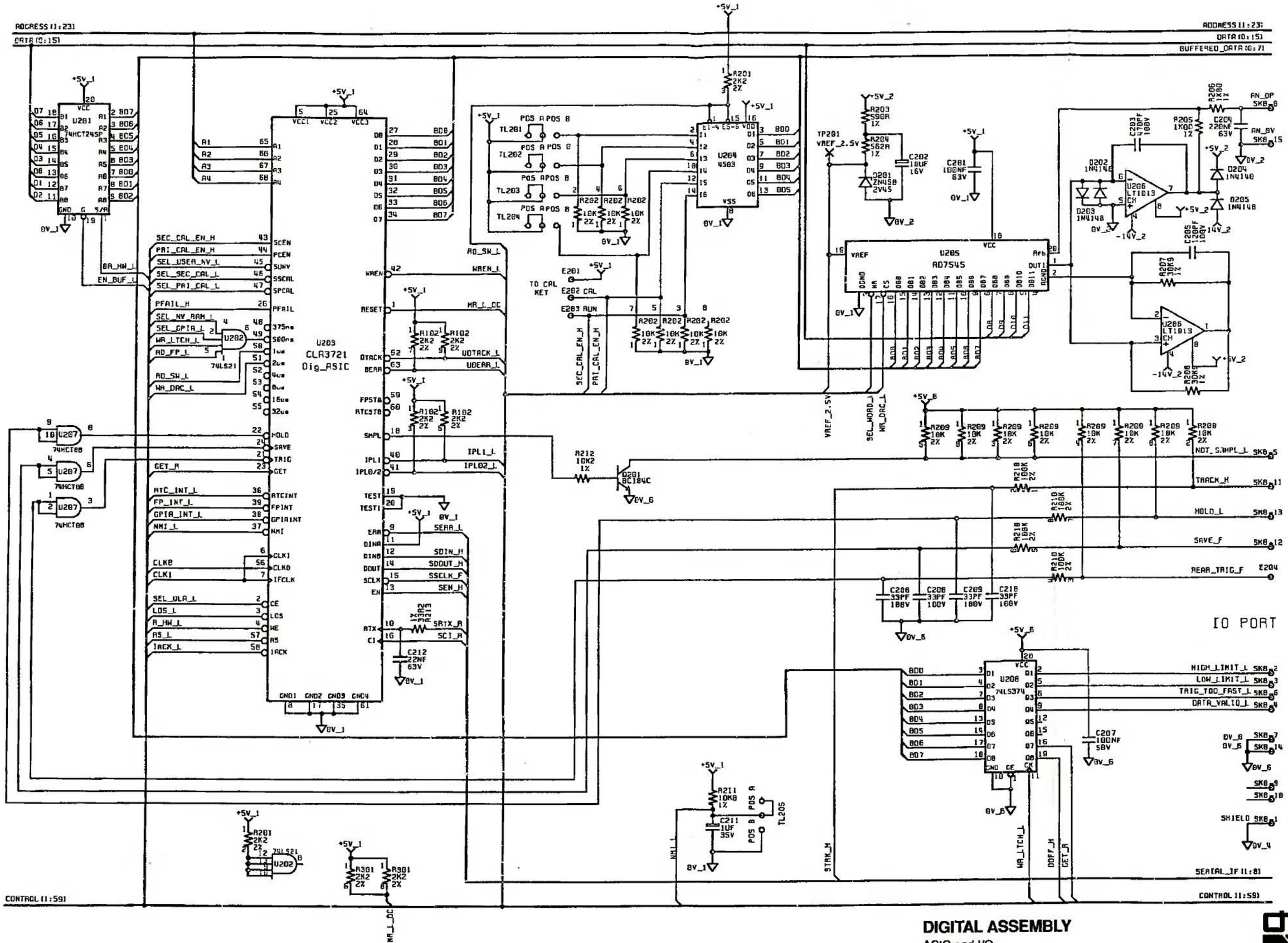

1271

DIGITAL ASSEMBLY

ASIC and I/O

Drawing No. DC400901 **Sheet 2 of 5**

datron WAVETEK

© Datron Instruments 1989

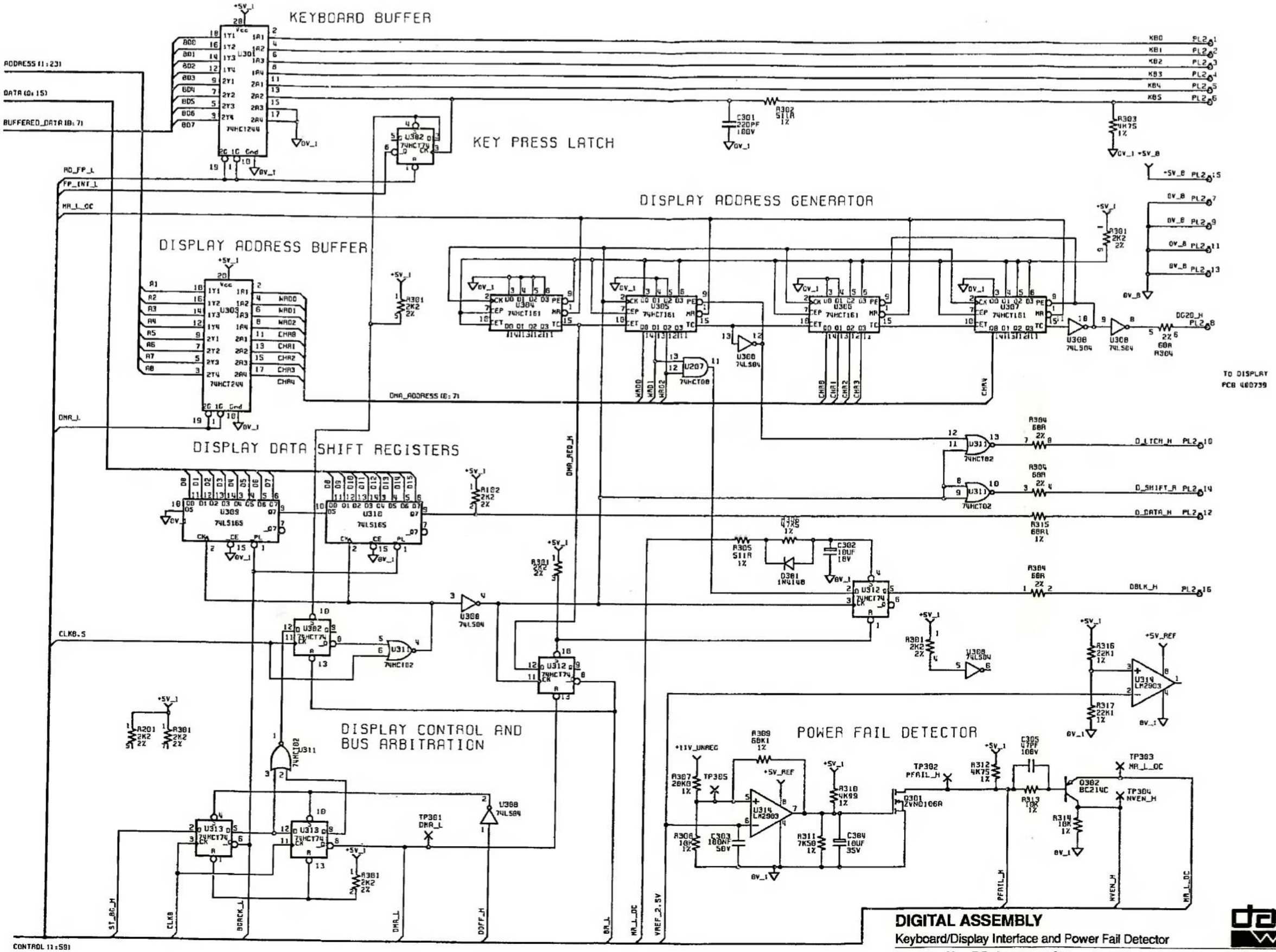

DIGITAL ASSEMBLY

Keyboard/Display Interface and Power Fail Detector

Drawing No. DC400901 **Sheet 3 of 5**

1271

datron WAVETEK

© Datron Instruments 1989

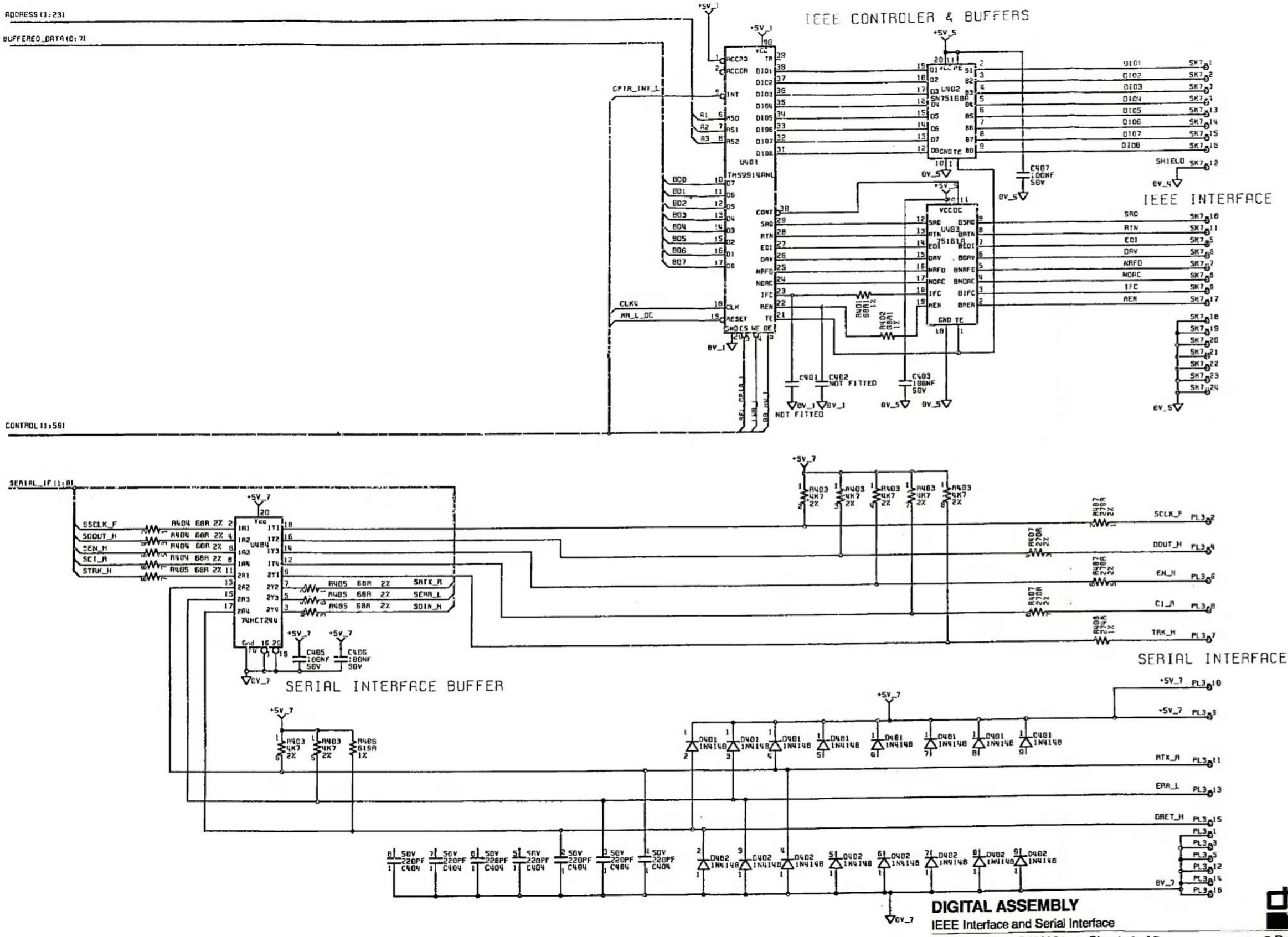

DIGITAL ASSEMBLY

IEEE Interface and Serial Interface

Drawing No. DC400901 **Sheet 4 of 5**

1271

datron WAVETEK

© Datron Instruments 1989

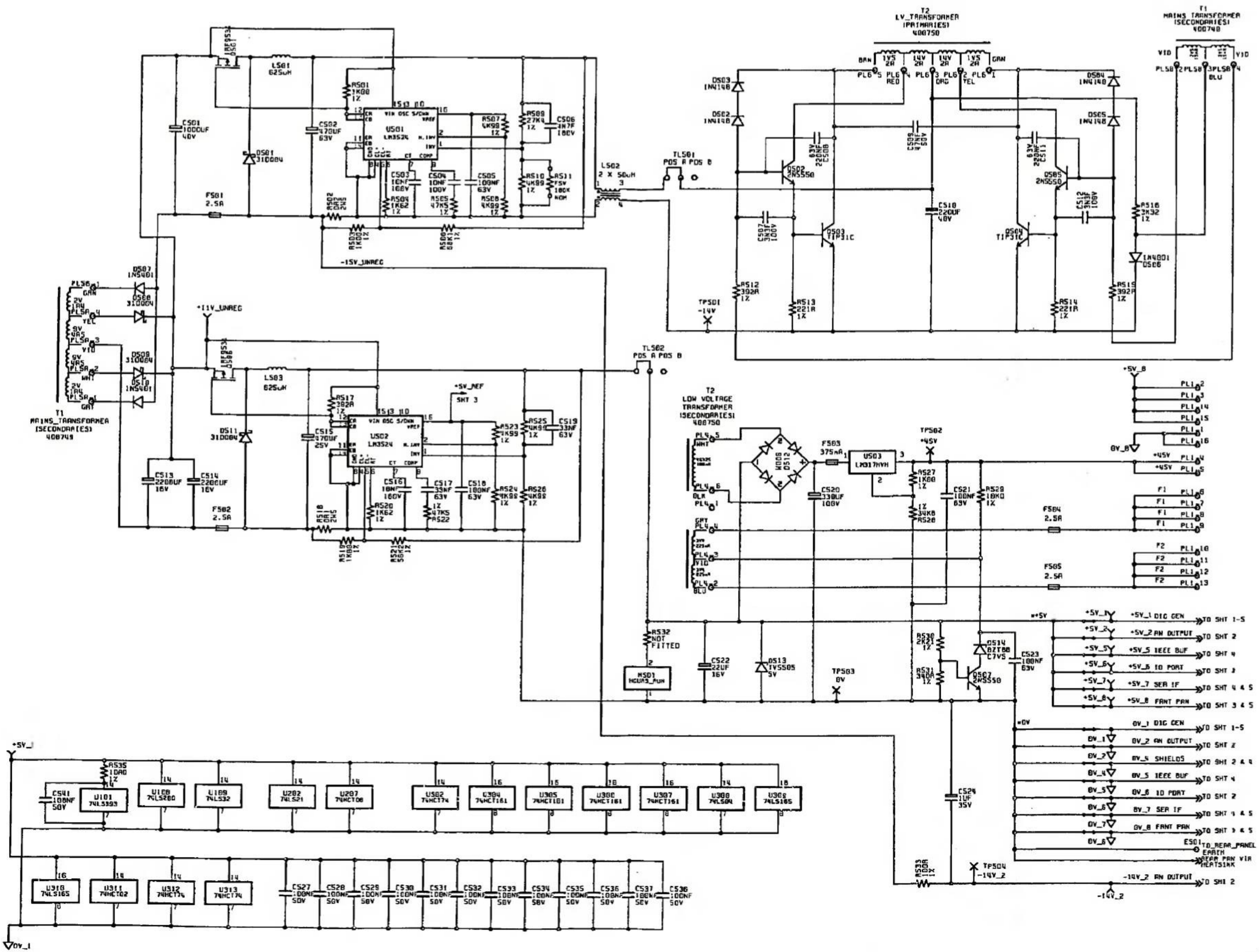

1271

datron WAVETEK

DIGITAL ASSEMBLY

Power Supplies

Drawing No. DC400901 **Sheet 5 of 5**

© Datron Instruments 1989

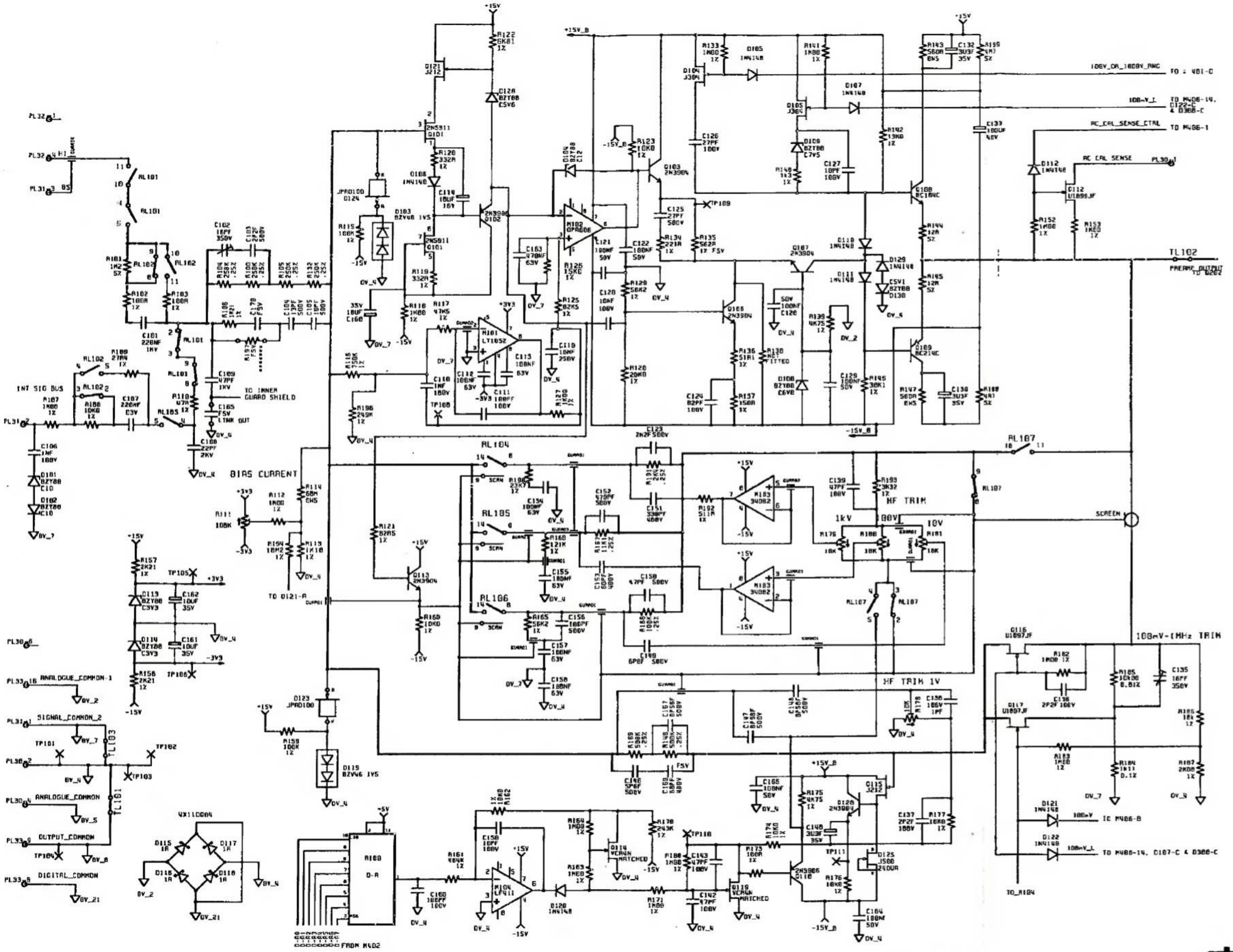

A.C. ASSEMBLY

Preamplifier

Drawing No. DC400870 **Sheet 1 of 4**

© Datron Instruments 1989

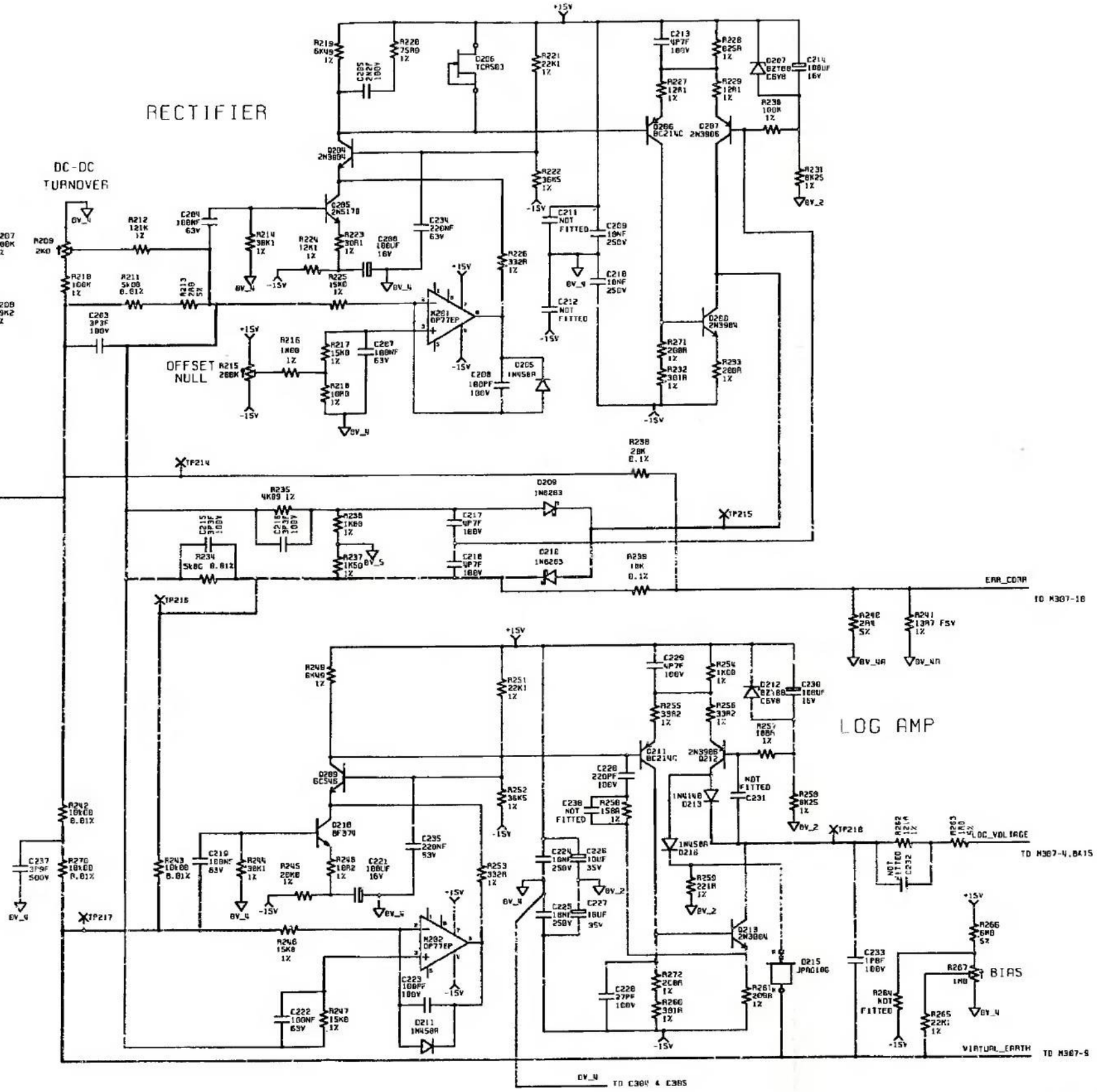

1271

A.C. ASSEMBLY

Precision Rectifier and Logarithmic Amplifier

Drawing No. DC400870 Sheet 2 of 4

datron WAVETEK

© Datron Instruments 1989

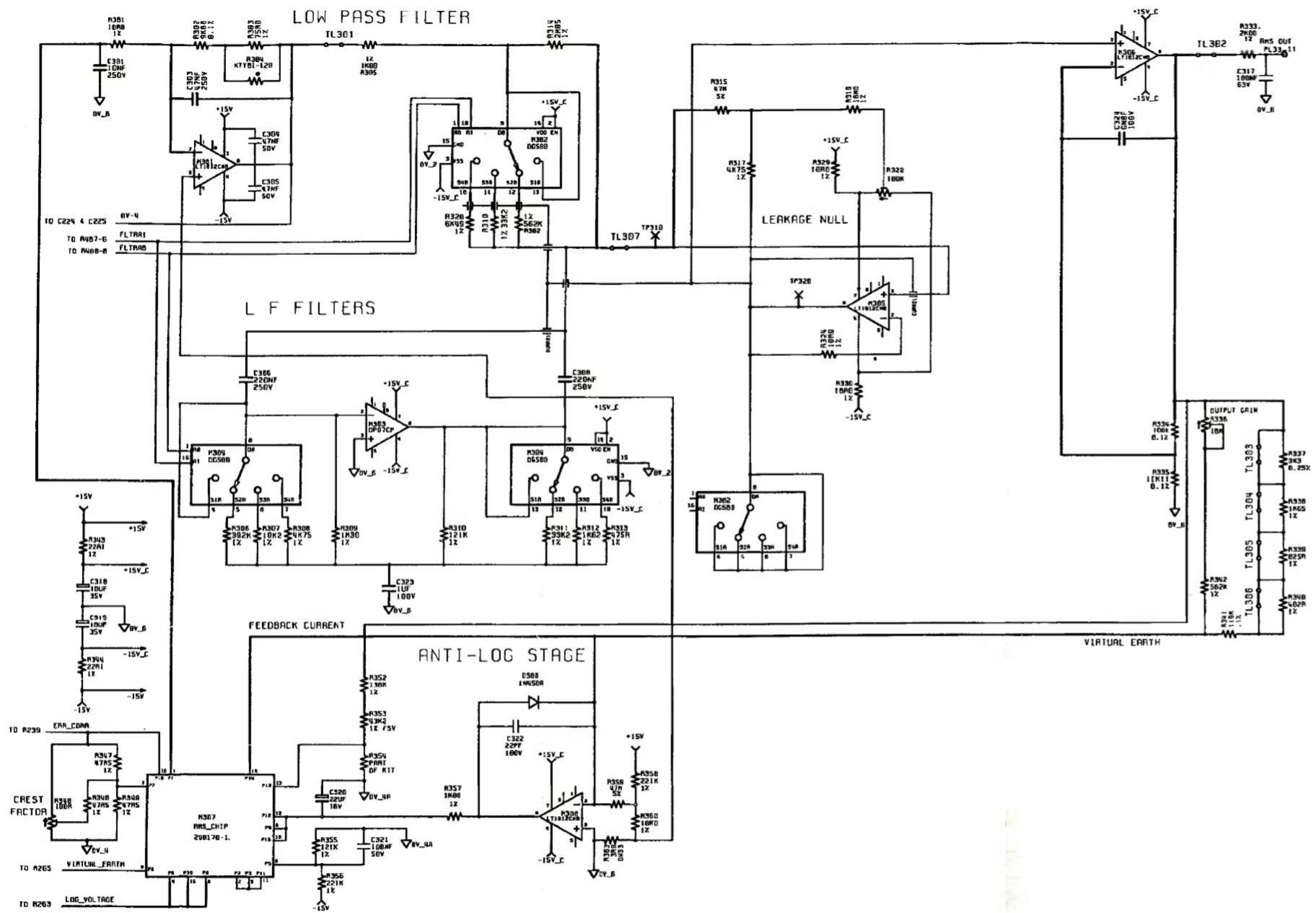

A.C. ASSEMBLY

RMS Converter

Drawing No. DC400870 **Sheet 3 of 4**

1271

datron WAVETEK

© Datron Instruments 1989

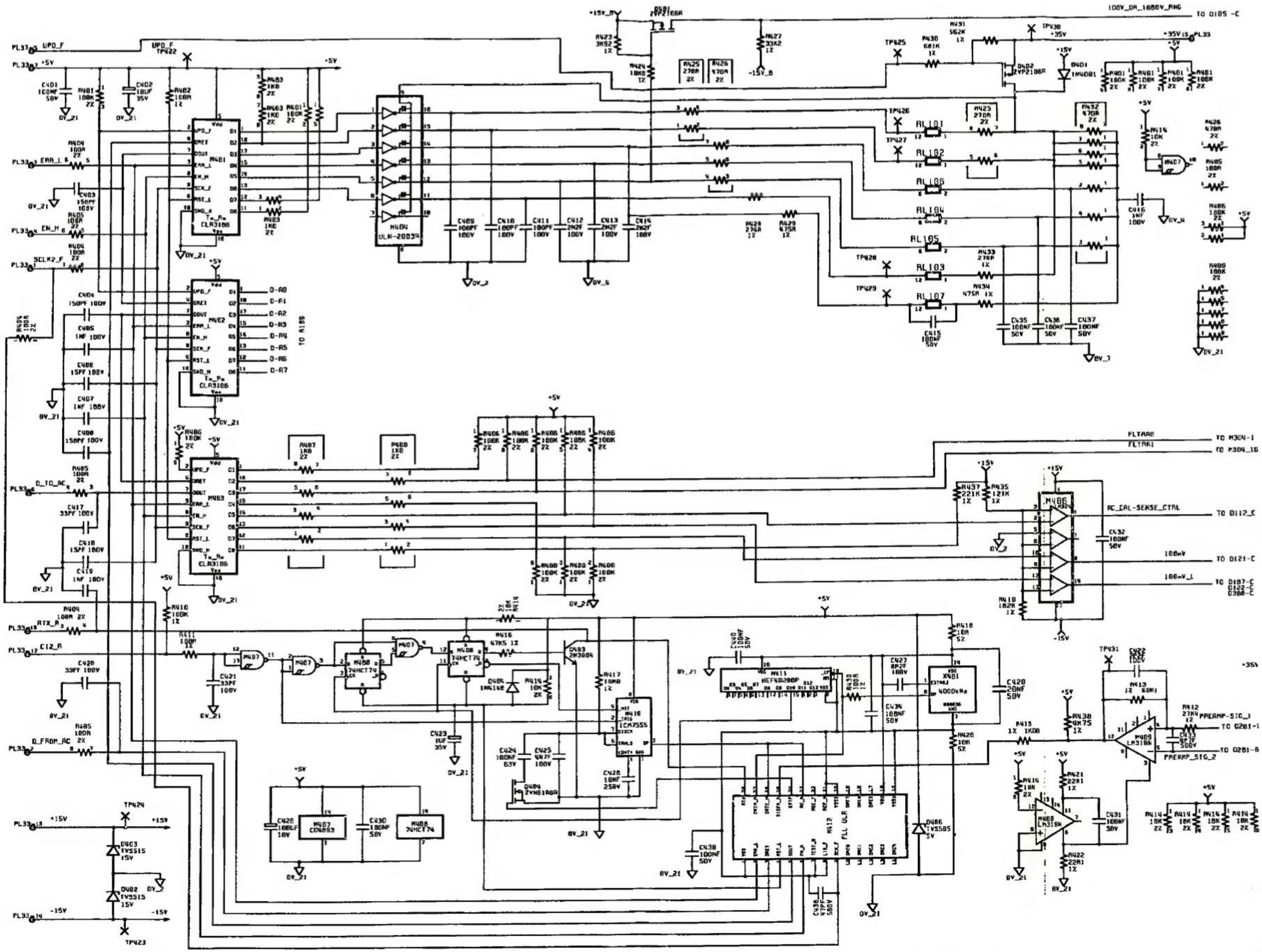

A.C. ASSEMBLY

Control Logic

Drawing No. DC400870 **Sheet 4 of 4**

1271

datron WAVETEK

© Datron Instruments 1989

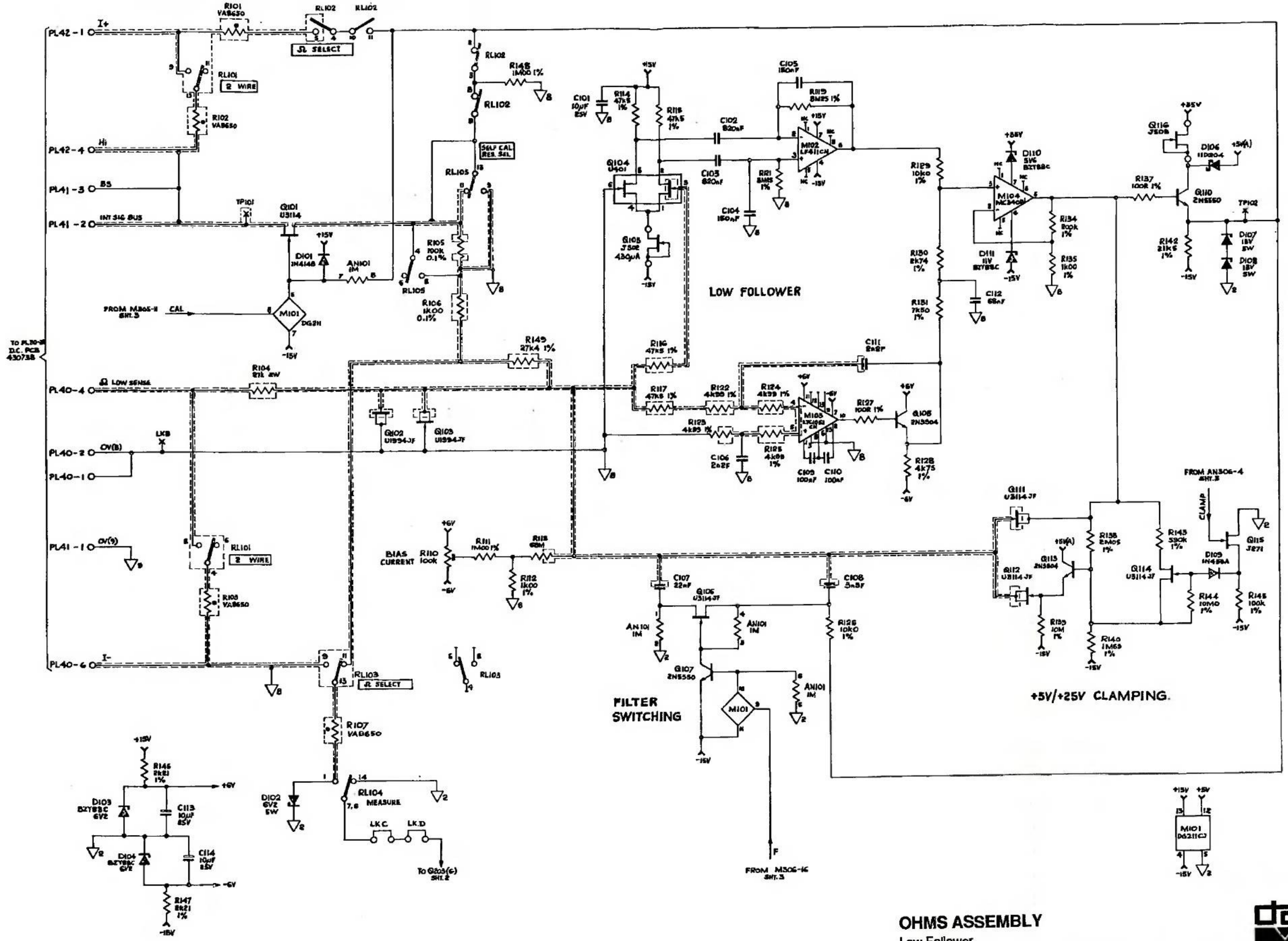

1271

datron WAVETEK

OHMS ASSEMBLY

Low Follower

Drawing No. 430742 Sheet 1 of 3

© Datron Instruments 1989

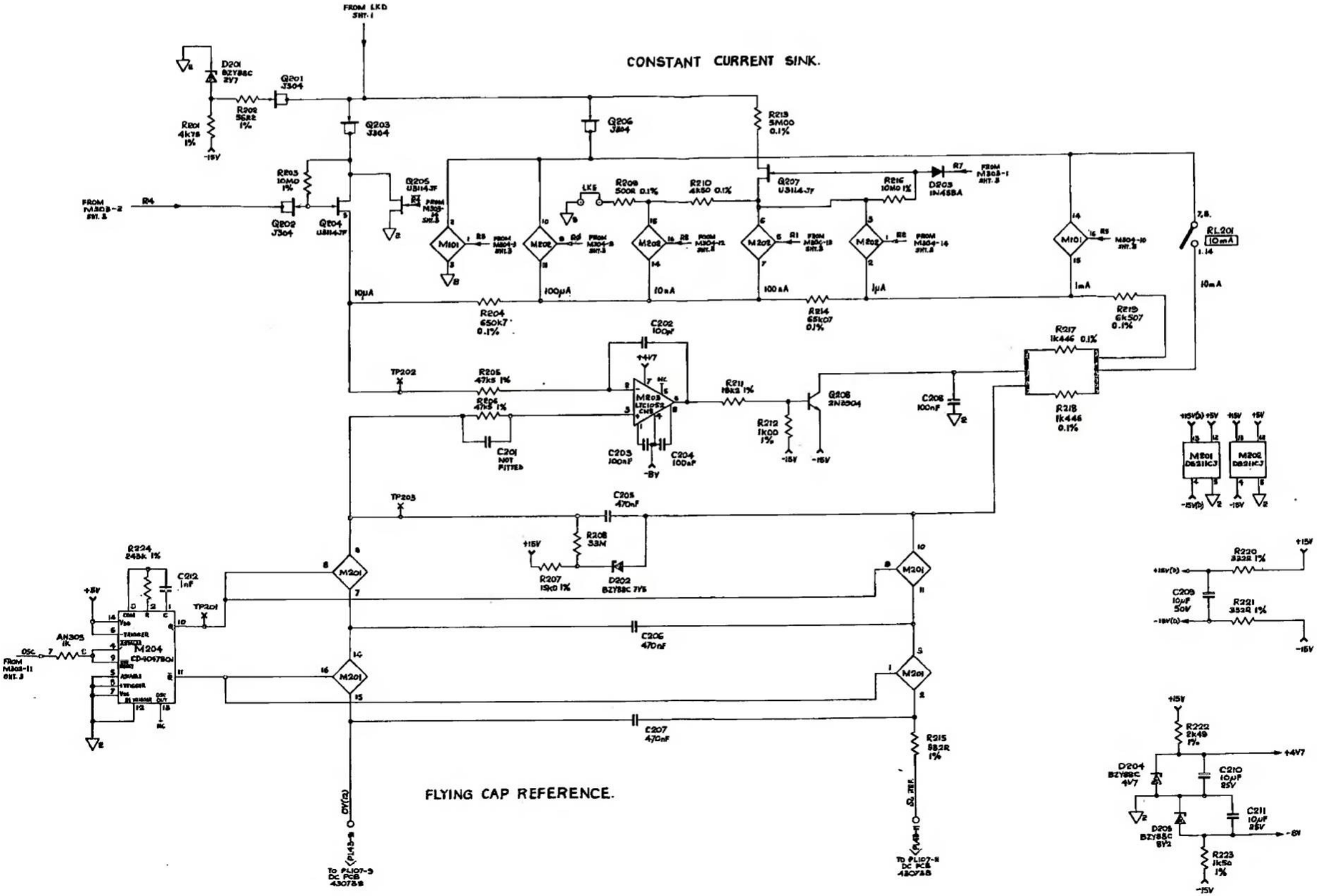

OHMS ASSEMBLY

Constant Current Sink

Drawing No. 430742 **Sheet 2 of 3**

1271

datron WAVETEK

© Datron Instruments 1989

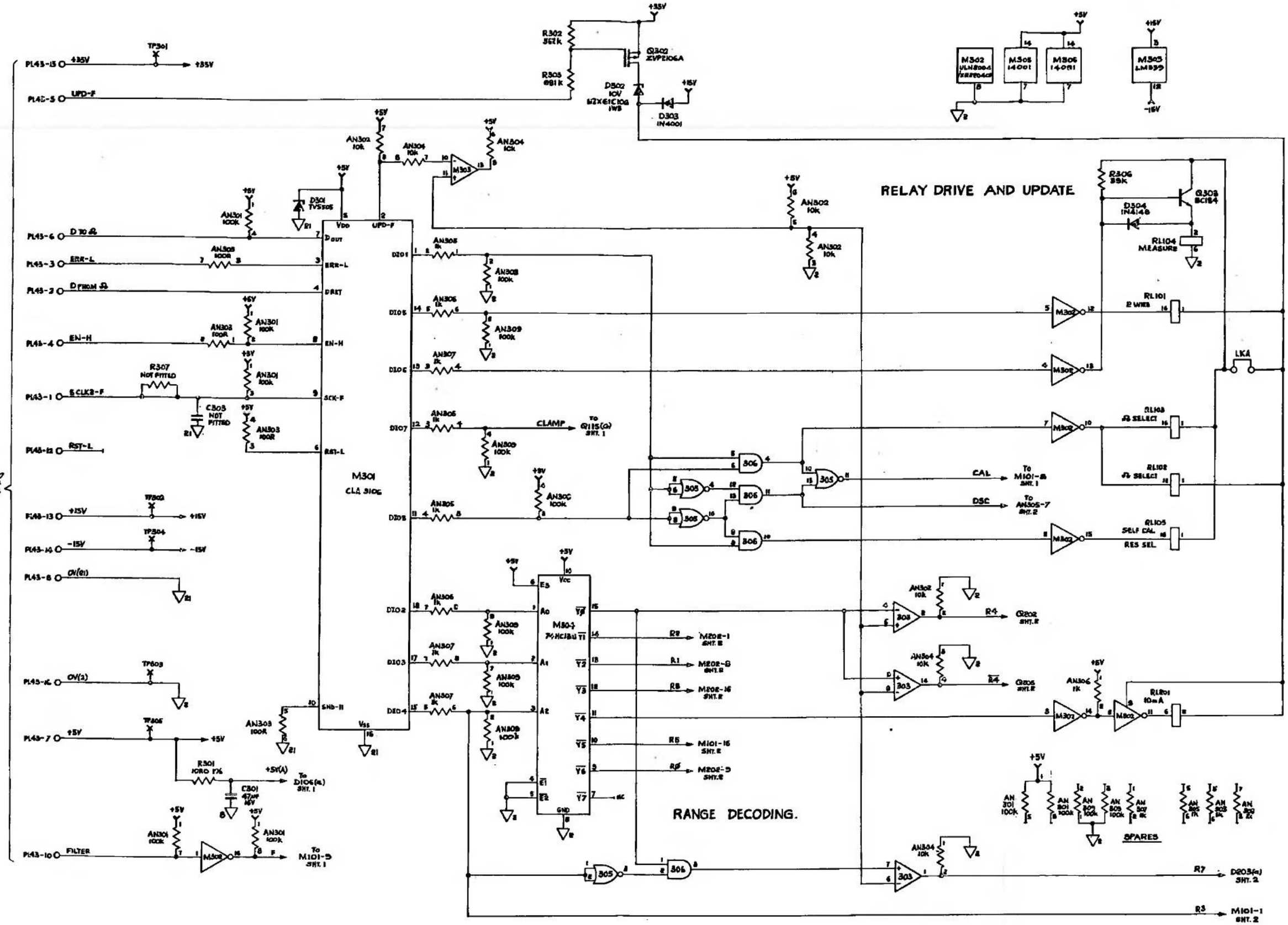

OHMS ASSEMBLY

Control Logic

Drawing No. 430742 **Sheet 3 of 3**

1271

datron WAVETEK

© Datron Instruments 1989

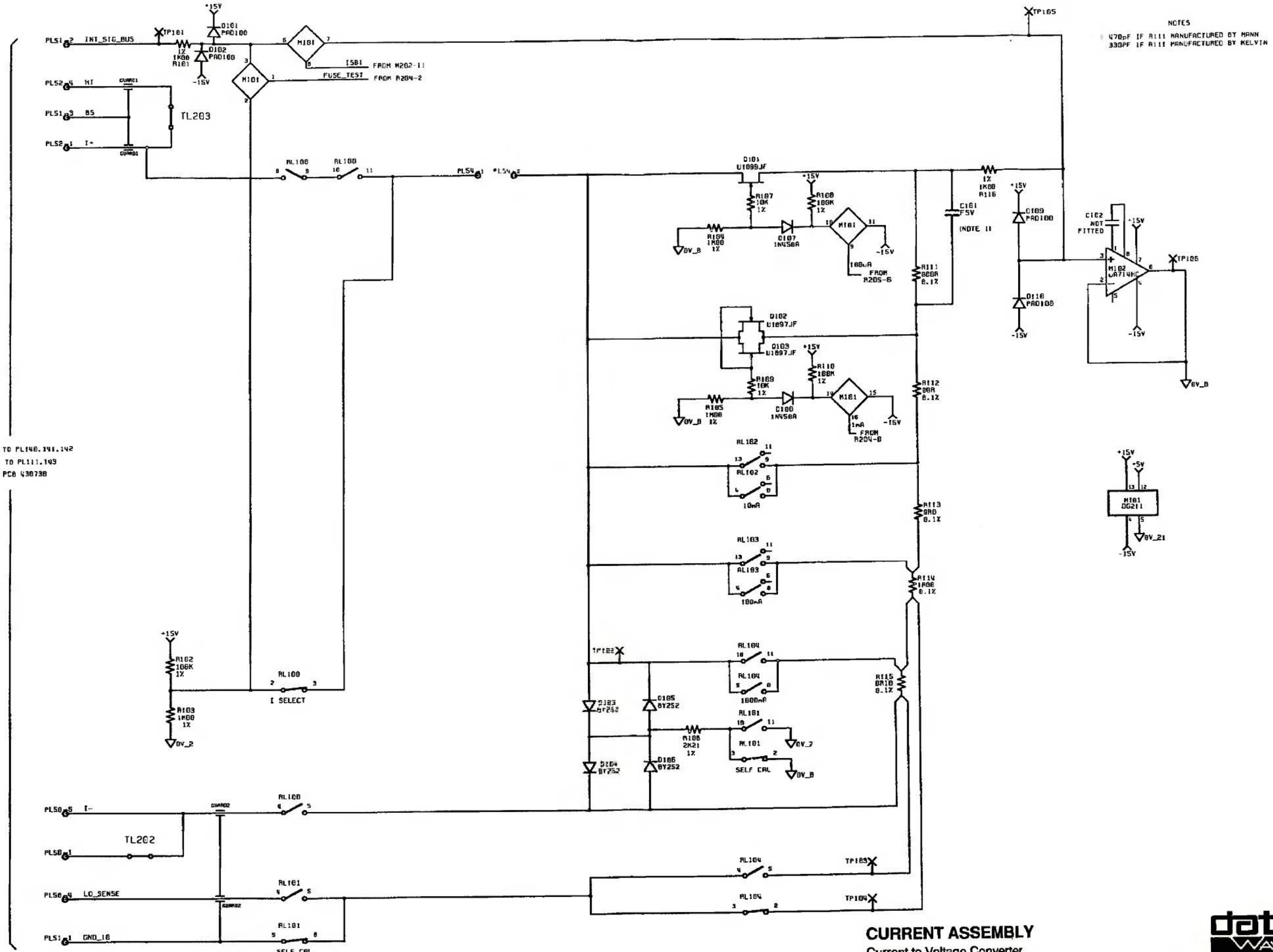

CURRENT ASSEMBLY

Current to Voltage Converter

Drawing No. 430743 **Sheet 1 of 2**

1271

datron WAVETEK

© Datron Instruments 1989

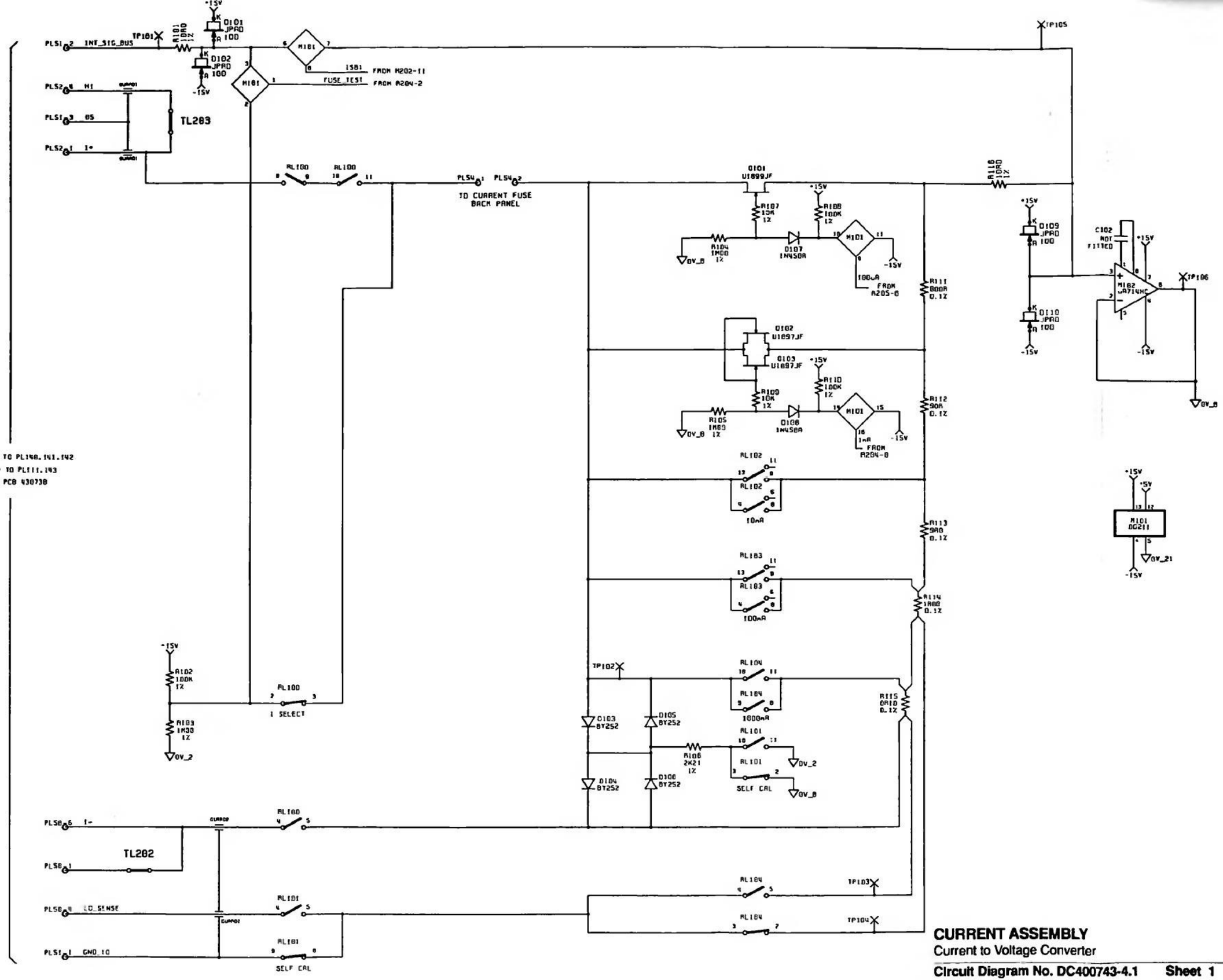

PLS0.51,52 TO PL140.141.142
E101.102 TO PL111.143
DC PCB 430738

CURRENT ASSEMBLY
Current to Voltage Converter

Circuit Diagram No. DC400743-4.1 **Sheet 1**

1271

WAVETEK datron

© Wavetek Ltd. 1992

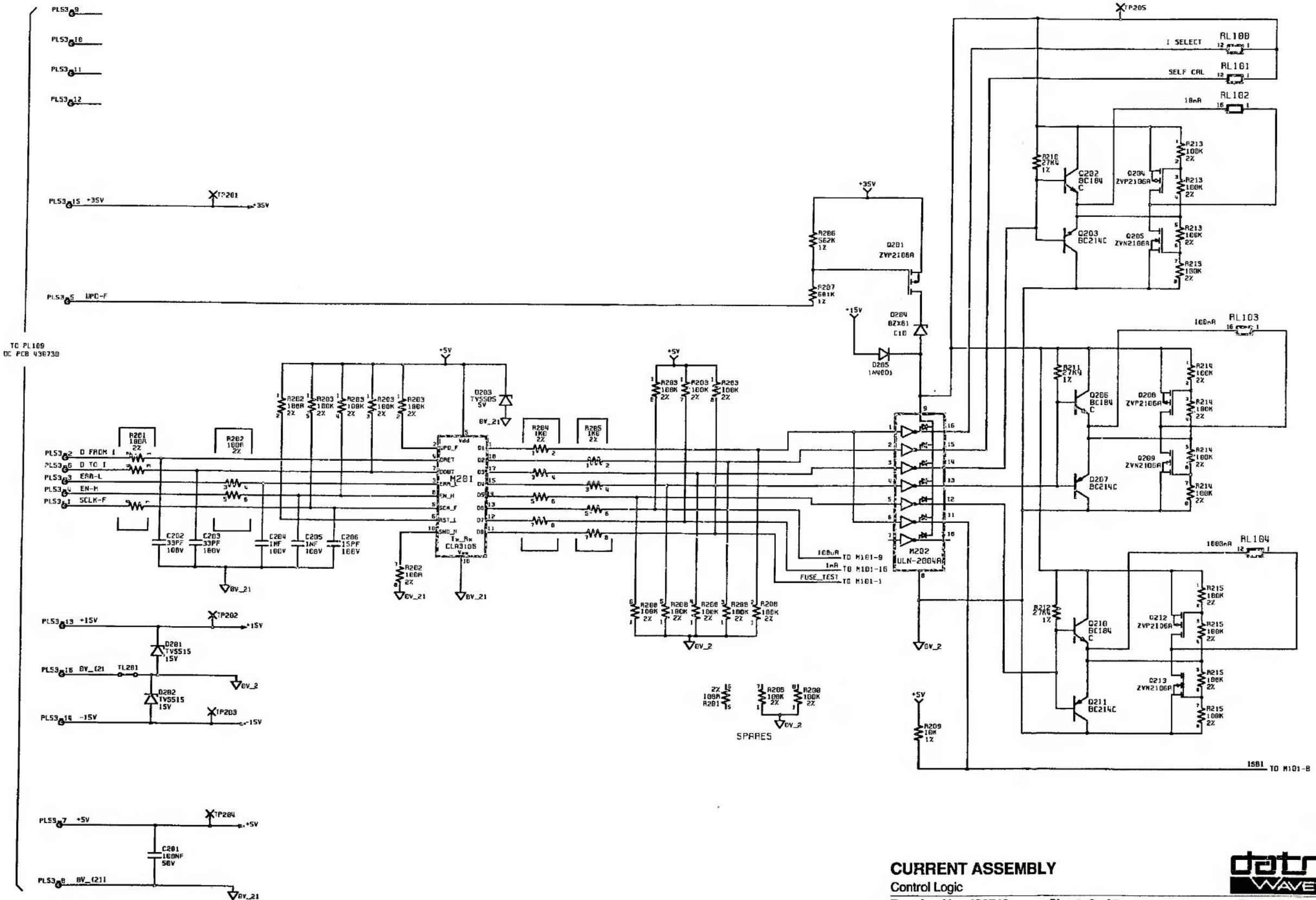

CURRENT ASSEMBLY

Control Logic

Drawing No. 430743 **Sheet 2 of 2**

1271

datron WAVETEK

© Datron Instruments 1989